Essential Jigs and Fixtures

.

Follow the steps below to make an essential dado fixture.

Prepare parts for the Dado Fixture:

- Style (2)
- Cross-members (2)

Attach cross members to one style with one screw each and check for square. The style should rest on the face of the cross member.

Place router face plate on cross member and against the edge of the style. If possible, use two face plates; one on each cross member.

Place the second style on top of the cross member and beside the router face plate. Press the style firmly against the side of each faceplate and secure with a spring clamp.

Attach the style to each cross member with one screw.

Slide the router face place along the length of the channel created by the style to ensure a smooth action for the fixture.

Install a beading bit in the router.

On a sample piece of plywood, draw a line across the face using an accurate square.

Place the router in the fixture and make a plunge cut with the beading bit just deep enough to make a shallow impression. This marks our true center. Align the true center with one end of the square line on the plywood.

Repeat this process on the opposite side. You may need to loosen your screws to adjust your fixture. Ensure that the true center aligns with each end of the square line.

When the fixture is calibrated properly, secure in place with spring clamps before locking it into position with two to four screws per corner.

Your fixture is now made and calibrated to give you square, accurate dadoes for many projects to come.

Follow the steps bellow to make an essential circle cutting fixture.

Prepare parts for the circle cutting fixture:

- Pivot Block (1)
- Sub-base (1)
- Trammel-arm base. (1)
- ¼" / 20 T-bolt (1)
- ¼" / 20 Knob (1)

Rip the trammel-arm base to the radius of your router face plate plus ½". Make a center mark along the width and the location from the end of the board is equal to the radius of the router face plate plus ¼".

Use a compass to draw a circle that matches the diameter of the router face plate from this center point.

Clamp the router face plate so it aligns with this circle an one bolt hole registers on the center line along the width of the trammel arm base.

Use an appropriately sized self-centering hinge bit to drill pilot holes that correspond with the bolt holes on the router face plate into the trammel-arm base.

Drill a hole in the sub-base block with the largest forstner bit you have Locate the center of this hole so it centered in the width and the location from the end of the board is equal to the radius of the router face plate plus ¼". Relieve two sides of the drilled hole so the resulting shape is a "U". Drill a hole in the trammel-arm base using the same bit and locate the hole using the same method.

Drill a hole with a forstner bit in the center of the pivot block. This hole will counter sink for the head of the T-bolt. Drill through the center of this hole using a brad-point bit that matches the diameter of the bolt. Drill four counter sunk holes for screws into the face of the pivot block. Install a T-bolt from the back of the pivot block so it pierces through th front. Ensure that the back of the block is counter sunk enough.

Attach the sub-base to the trammel arm base ensuring that they align on the ends and over the hole drilled by the forstner bit.

Drill through the bolt holes pilots in the trammel arm base and trough the sub-base on the opposite side. Counter sink from the sub-base side so the bolts can thread through the fixture and into the base of the router.

Use a plunge router with a ¼" bit and an edge guide to route a slot into the trammel arm base. Adjust the length of the slot to maximize the capacity of the fixture without compromising its integrity

.

Use the T-bolt and ¼" / 20 knob to attach the trammel-arm base to the pivot block.

Your Circle cutting fixture is now ready to cut accurate circles and radii safely.

Follow the steps below to make an essential cross-cut sled.

Prepare parts for the sled:

- Sled Base (1)
- Rear Support Fence (1)
- Fence base (1)
- Fence upright (1)
- Fence upright support (1)
- Square adjustment block (2)
- Miter track guide (1)
- ¼" / 20 T-bolts (3)
- ¼" / 20 knobs

Cut Dado in sled base to receive rear fence support.

Install rear support fence in dado.

Rip fence upright support so it is narrower than the fence upright. The difference should be equal to the thickness of the fence base. Laminate the pieces together so they are flush on one edge and a space equal to the thickness of the fence base remains on the opposite edge.

Draw a line on the fence base equal to the width of the fence upright support. Find the center of the remaining width. Make a mark two inches in from the left side.

Clamp the fence base onto the sled base, aligning it ½" from the front edge. Drill through

the center point with a ¼" brad point bit.

Install the circle cutting fixture into the drilled hole in the sled base. Use the fixture to route ¼" arched slots in the sled base on either side of the intended sawblade location. Flip the sled base over and use the same method to route arched counter-sunk slots for the heads of the T-bolts.

Attach the fence base to the sled base using the ¼" drilled hole and a T-bolt and knob. Drill from the back of the sled base through the fence base in the center of the arched slots.

Attach the fence upright and upright support assembly to the fence base.

Drill a hole to receive a threaded insert into a scrap block using a self centering doweling jig. Use the same process to drill a hole into the edge of the fence base on the right side of the intended sawblade location.

Install the inserts into the fence base and the scrap block. Install a ¼" /20 bolt into the insert in the scrap block. Place a spring over the bolt as it threads through the opposite side of the block. Keeping the spring on the bolt, thread it into the insert in the fence base.

Attach the completed fence assembly to the sled base using the t-bolts and knobs.

Attach the scrap block to the sled base. Check the action on the square adjustment.

Mount the completed sled onto the miter guide. Calibrate the fence for perfectly square cuts for many projects to come.

fundamentals

Jigs 101

BUILD JIGS QUICKLY AND ACCURATELY USING THE RIGHT MATERIALS, FASTENERS, AND ACCESSORIES

BY GARY ROGOWSKI

A good workshop jig will hold your work accurately and safely so you can make consistent, repeatable cuts quickly. Take the template-routing jig I use at the router table (see photo, right). It protects my fingers and allows me to reproduce a shape over and over. It also speeds up the shaping process. So in one jig I get safety, accuracy, and speed.

The purpose of any jig is to make life in the shop easier. Whether building a simple one-use jig for the job at hand or a more complex jig to last a lifetime, choose materials wisely and take your time.

I design jigs to be easy to use, with stable materials that are flat and straight; I won't grab just any piece of scrap and waste time trying to make it flat and square. I stick to plywood or medium-density fiberboard (MDF), with an occasional piece of hardwood where I need a high degree of accuracy or durability. I use glue or simple fasteners so that the jigs are quick to build yet hold up in use. And I ease edges to make them friendly to the touch.

Photos: staff

The right materials

The purpose of the jig will determine what materials you should use. Mostly I use ¾-in.-thick MDF or veneer-core plywood.

When I need an absolutely square fence on a jig, I'll use a piece of straight-grained hardwood milled flat and square. When I need to glue up layer after layer, such as when I make a thick bending jig, I'll use particleboard. It's inexpensive and works just fine. If you need material with no voids or gaps in its edges, then use a material like Baltic-birch plywood. (In the western United States, a product known as Apple-Ply is also widely used for jig making.) I've used Masonite for router templates, but I generally prefer MDF because it's easier to see pencil lines on the lighter surface. For jigs that get screwed or nailed together on edge, I use solid wood or plywood and drill pilot holes to avoid splitting the material.

Material that's ¾ in. thick allows enough room for countersinking large screw heads or bolt heads. It also reduces the chance of splitting if I have to screw into the edge of a piece. There are times when using thinner stock helps me hold a jig easier or maneuver it faster. When I cut butterfly keys on the bandsaw, for example, I hold the small workpieces steady in a simple jig made from two layers of ¼-in. MDF. It's nice to have a thinner profile on the jig to hold a thin wedge piece.

Flat and stable. *Sheet goods like Baltic-birch plywood, particleboard, and MDF are the basic materials for jigs. Hardwood is best for runners and fences.*

Sacrificial plywood. *This jig for cutting key slots in miter joints is made from scraps of ¾-in. plywood.*

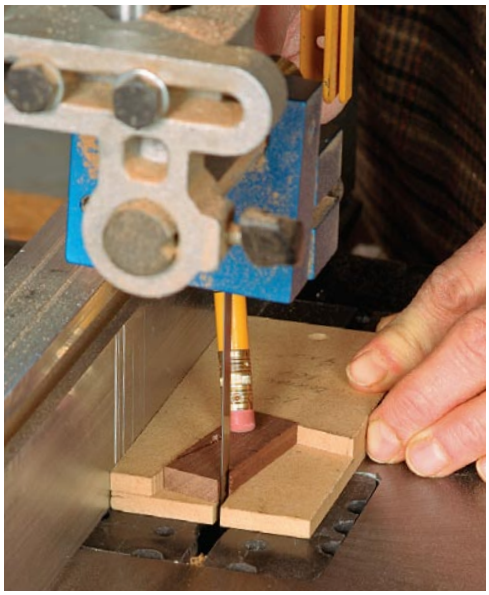

Thin MDF. *Two layers of ¼-in. MDF create a handy jig for cutting butterfly keys. A pencil eraser holds down the work.*

Hardwood for durability. *Hardwood components, like these runners on a crosscut sled, can withstand repeated movement and rubbing. Note that the fence is also hardwood, milled perfectly straight and square.*

Low-cost option. *Particleboard is an inexpensive material for building up thick bending jigs.*

The right fasteners

Some jigs need to be assembled with glue to remain accurate through years of regular use. Just be sure that the surfaces you're gluing are clean and clamp them together for about half an hour. The trouble with glue is that it acts as a wonderful lubricant for 10 seconds or so, then locks your pieces into the wrong position. Or so I've heard.

To combat that creep, use brads or pin nails to lock pieces in place. Spread the glue, align the pieces, shoot several nails in place, then put on the clamps. If you don't have a nailer, clamp the pieces of the jig at the edges so they won't slip when you clamp the faces together. Or, dry-clamp the pieces, predrill screw holes, then glue and screw the jig together.

For jigs that don't require the permanence of glue, use drywall screws or round-head wood screws. Obviously, you shouldn't put any screw where it will get in the way of a blade or bit. For example, my tenoning jig fits over the tablesaw fence, but I made very sure that the screws holding it together are above any blade-height setting. And, obviously, don't use a round-head screw where it might prevent part of the jig from sitting flat, pivoting, or sliding smoothly.

Some jigs slip out of adjustment over time, and you can't always tighten screws enough to bring the jig back into line. On my crosscut jig, for instance, I bolted the fence to the sled. That leaves a little wiggle room for adjustment, and makes it easy to crank down hard on the bolts, both when building the sled and when it needs to be realigned.

Quick and strong. *Drywall screws and yellow glue are fine for most jigs. Use bolts for extra strength and adjustability. A brad nailer can help keep parts aligned during glue-up.*

Glue for keeps. *For jigs that will see repeated use, glue the components together.*

Pinned down. *A few strategically placed brads keep the parts from shifting during glue-up.*

Wiggle room. *Use bolts and slightly oversize holes when you need room for adjustment, such as on this crosscut-sled fence.*

Clamp in place. *Clamp components together to ensure that they are properly aligned (above). Keep components clamped as you drill holes and drive screws (left) to be sure the pieces don't shift.*

The right hold-downs

Many jigs are designed to work with some type of clamp to hold the jig down on the bench or on a workpiece, to hold a stop block on the jig itself, or to hold a workpiece in place. There are several types of clamp you can use. But always make sure there's no way in the world that the clamp can be nicked by a blade or cutter. And if the clamps will double as handles, be sure you position them where they keep your hands out of harm's way.

Standard C-clamps or F-style bar clamps work great, especially for holding a jig in place. They're easy to adjust and provide plenty of clamping pressure. When I need only a little holding power—to secure a stop block, for example—I'll use spring clamps. For the ultimate in low-tech clamping solutions, use opposing wedges to clamp your work in place.

For holding workpieces in place, as on a tenoning jig or template-routing jig, DeStaCo-style toggle clamps are the ticket. Screw these in place or mount them in T-tracks screwed into slots routed into the jig base for clamping pressure exactly where you need it. There are several types of toggle clamps available, so pick the one that best suits your needs.

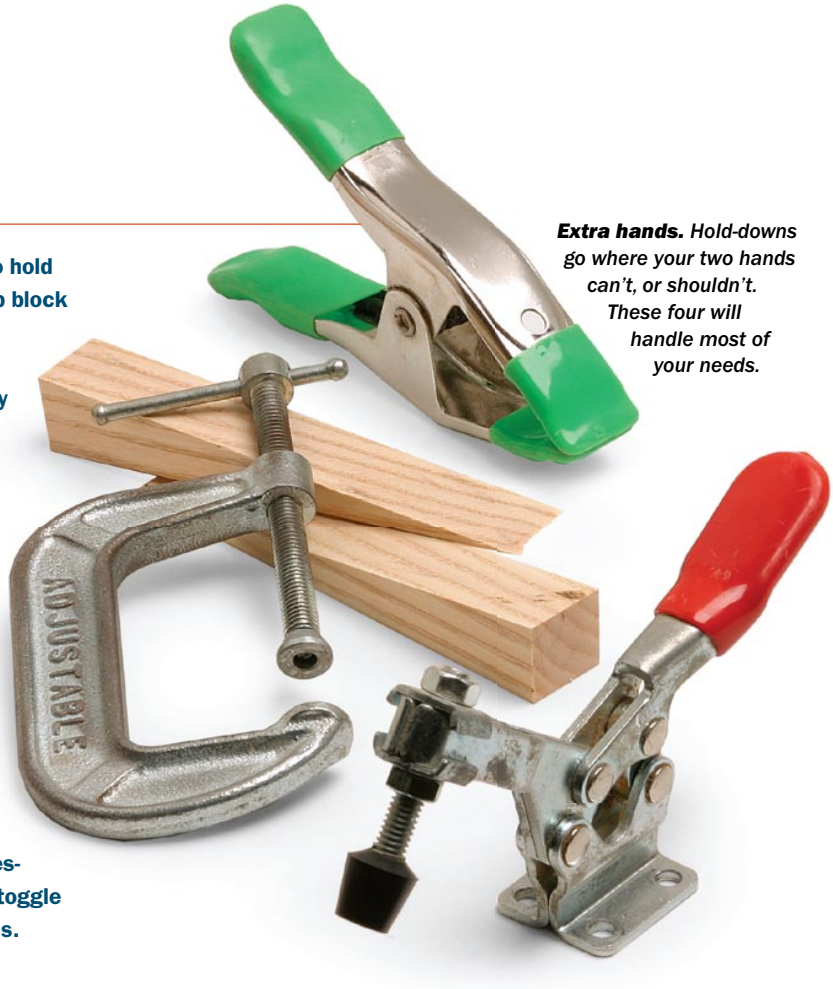

Extra hands. *Hold-downs go where your two hands can't, or shouldn't. These four will handle most of your needs.*

Spring action. *A spring clamp often provides enough holding power to keep something from shifting.*

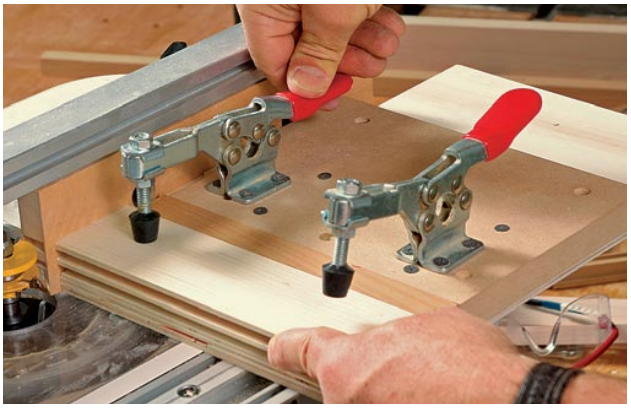

Double duty. *Toggle clamps hold the workpiece in a jig and provide convenient hand-holds.*

Low-tech hold-down. *Opposing wedges can be an effective way to hold a workpiece in place in a jig like this router mortising box.*

fundamentals

Build a simple crosscut sled for the tablesaw

ESSENTIAL JIG ENSURES SQUARE CUTS

BY GARY ROGOWSKI

Every saw needs one. *A shopmade sled makes it easier and safer to make accurate crosscuts on the tablesaw.*

It's a euclidean world, darn the luck. Woodworking goes better when angles are precise, true, and above all, consistent. "Consistently off" may be how your work has been going until now, but making a tablesaw crosscut sled can fix many crosscutting woes.

My sled is a focal point of my shop. With it, I can produce square ends on stock. I can clamp on a stop block or make a pencil mark for repeat cuts. I can use the sled as a platform for other jigs to cut precise angles and to cut a variety of joints. And I can do all of this work safely and with greater accuracy.

A crosscut sled provides support from two directions (behind and underneath)

ANATOMY OF A SLED

A crosscut sled is a versatile tool with just a few carefully assembled parts. Its accuracy relies on close-fitting runners and a square fence.

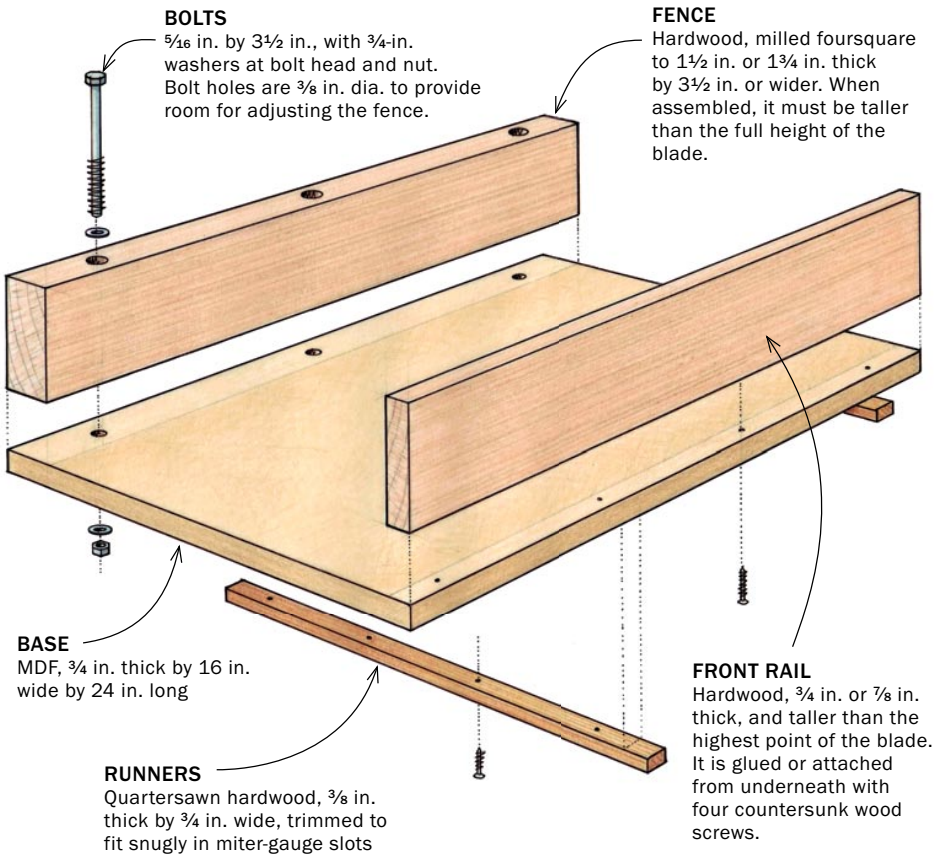

1. Attach the fence

Attach the fence with bolts. *This makes it easier to adjust the fence so that it is square to the blade.*

Photos: Steve Scott; drawing: Vince Babak

and so holds a workpiece more securely than most stock miter gauges. This is especially helpful when crosscutting wider pieces, where a sled is a much safer option than running a workpiece against the rip fence, which is a recipe for kickback.

The sled is accurate in part because its twin runners ensure that the stock moves in a straight line past the blade. The stock is registered against a back fence that is carefully set at 90° to the blade. The fence is adjustable, so it can be reset if it gets knocked out of whack.

Start with a square piece of MDF

You can build any size sled, but I strongly recommend starting small. I've learned that it pays to make your first sled for 99% of cuts, that is, boards less than 13 in. wide. The sled will be easier to make, easier to move, and easier to adjust. For any cut wider than 13 in., I have another sled at 37 in. wide.

There are several keys to an accurate sled: a flat baseplate, straight runners that fit snugly in the miter slots, and a flat and square fence. Make the base out of ¾-in. medium-density fiberboard (MDF) about 16 in. wide by 24 in. long. Attach a front rail that is taller than the fullest height of the sawblade. Its job is to hold the front of the jig together.

Make fence and runners of hardwood

I make the fence out of hardwood, milled foursquare about 1½ in. thick and taller than my tallest cut. I make it this thick so I can fasten it onto the baseplate with bolts and washers. I built my first sled with screws, and they just don't hold up to the banging around this jig gets. If your MDF is relatively square, bolt on the fence so that its rear face is aligned with the back of the base. You'll adjust it later to square it with the blade.

For this sled, I used 5⁄16-in. bolts and drilled ⅜-in.-dia. holes. This gives me room to adjust the position of the fence.

The runners are critical to the success of the jig. If they don't run without play in the miter-gauge slots, then your jig will ride sloppily, your cuts will be inconsistent, and your salty vocabulary

2. Install the runners

Make the runners of quartersawn hardwood. With the grain oriented in this way, seasonal wood movement will cause the runners to shrink or swell in thickness, as opposed to width. This means the runners won't bind.

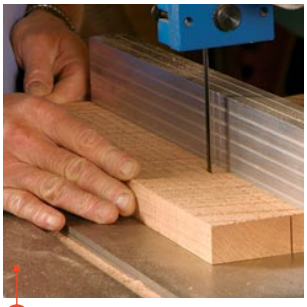

1 ***Bandsaw to rough dimensions.*** *Set the fence using measurements taken from the tablesaw's miter-gauge slot.*

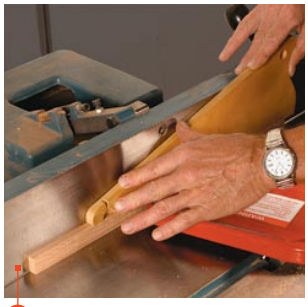

2 ***Joint two faces.*** *These will serve as reference surfaces for final trimming of the runners to fit in the miter-gauge slots.*

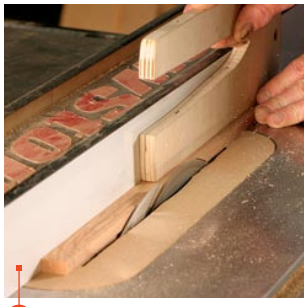

3 ***Trim to final width.*** *Take light cuts and check the fit in the slot as you go. You also can use a planer or a handplane.*

4 ***Attach the runners.*** *Assembling the sled with the runners in their slots helps ensure they'll be parallel and properly spaced when you're done. Attach the runners with wood screws driven into countersunk holes.*

5 ***Trim the high spots.*** *Push the completed sled back and forth in the slots a few times. Any places where the runners rub against the side of the slots will darken. Trim these areas with a scraper, then wax the runners and the bottom of the sled to reduce friction.*

3. Square the fence to the blade

The sled won't make accurate crosscuts unless the fence is precisely perpendicular to the blade. The oversize bolt holes in this fence make it possible to adjust the angle until test cuts yield square results.

1 ***Make the kerf.*** *Set the blade to its full height and cut through the sled.*

2 ***Make a test cut.*** *Crosscut a piece of wide stock to gauge the fence's accuracy.*

3 ***Check the cut with a square.*** *Any gaps will help you determine the direction and amount of adjustment the fence requires.*

will grow at an alarming rate. Make the runners of hard-wearing quartersawn stock such as oak or maple, about ⅜ in. thick, or slightly thinner than the depth of the gauge slots. You don't want the runners bottoming out in the slots and lifting the baseplate off the saw table.

Make the runners to fit snugly in width, trimming them with a handplane to fit into the gauge slots. Next, drill four countersunk holes in each runner for flat-head screws to hold it in place.

Mount the runners and adjust the fence

Place the runners in the slots, lay the assembled base and fences on them, and push the package all the way to the rear of the saw table so that one set of countersunk holes is visible. Make sure the jig's fence is relatively parallel to the back edge of the saw. Mount two screws into the sled, one in each runner. Then slide the assembly back to the front edge of the saw table so that two more holes are visible. Mount these screws and then flip the sled over and drill and mount the four remaining screws.

Place the sled in the slots and try to push it. The runners will probably be too tight. Wax them and the bottom and see if will slide. If not, check for black spots on the runners that show where they're rubbing. Use a scraper or shoulder plane to trim those areas, rewax, and try again. The sled should move effortlessly in the slots with no side-to-side play.

Now you're ready to start working. Make the first cut in the sled by raising the blade just enough to slice through the baseplate. Then raise it for a higher cut. Place a piece of scrap on the sled and crosscut it, checking the results with a square. Adjust the fence accordingly. You can make a through crosscut and flip the pieces to see if they line up perfectly, but I prefer to use a square. Lock down the fence with the bolts when you're cutting square.

Remember to always set the jig down so that it's not resting on its fence. You don't want it knocked about. Also, be very careful of the exit point on the sled. Mark this zone to remind yourself never to place your fingers close to it. □

FineWoodworking.com

In a video, Gary Rogowski offers tips and tricks to upgrade a tablesaw crosscut sled. His suggestions will keep this useful jig working smoothly.

4 ***Mark your starting place.*** *Before adjusting the fence, mark its original location as a reference point.*

5 ***Tighten the fence.*** *When you're done adjusting, crank the bolts home and you're ready to make crosscuts.*

Ultimate Crosscut Sled

Achieve the accuracy of a sliding tablesaw for a fraction of the price

BY JOHN McCORMACK

With a bit of support at the outfeed end, most tablesaws excel at ripping—whether wide panels or long boards. Crosscutting these pieces is a different story.

Many commercial shops own large, industrial sliding-table tablesaws that make these cuts safely and accurately. But the options for a one-man shop on a limited budget are less attractive. Even an expensive aftermarket miter gauge has a relatively short stroke, and cutting steadily is difficult because of friction between the workpiece and the saw table. Many folks make a traditional carpenter's crosscut sled, with front and back hardwood fences and a pair of runners to engage the miter-gauge grooves. When accurate, these sleds are very useful, but the fences tend to warp and bow, and you have to shim them with masking tape. Another disadvantage is that these sleds lack a built-in measuring tape and stop system. The resulting cuts are seldom truly square or accurate. Last, the back fence limits the crosscut capacity.

A third alternative is to build this sliding crosscut sled that I first encountered at the Program in

LARGE PIECES AND REPEAT CUTS

Used in conjunction with the sled horse (p. 69), the crosscut sled can cut very large pieces safely and accurately. Crosscutting an 8-ft.-long piece of plywood is possible (left). The flip-stop on the sled's fence allows you to make accurate and repeatable crosscuts (right) on stock up to 56 in. long.

Photos: Mark Schofield; drawings: Jim Richey

A NEW APPROACH

The triangular shape is designed to support large pieces yet minimize the weight of the sled, while the handholds make the sled easier to carry on and off the saw. The 36-in. miter bar gives the sled a similar crosscut capacity. The single bar rides in the left-hand miter-gauge slot, so with your right hand on the dedicated handle, your body is safely to the left of the blade, unlike with a carpenter's sled. The two-part fence is designed not to bow and has a flat face that can be adjusted if necessary. It is perfectly square to the blade. The sawkerf marks the edge of the sled, making for easy layout and splinter-free cuts. Finally, a track-mounted stop, keyed to a self-adhesive ruler, ensures precise, repeatable crosscuts.

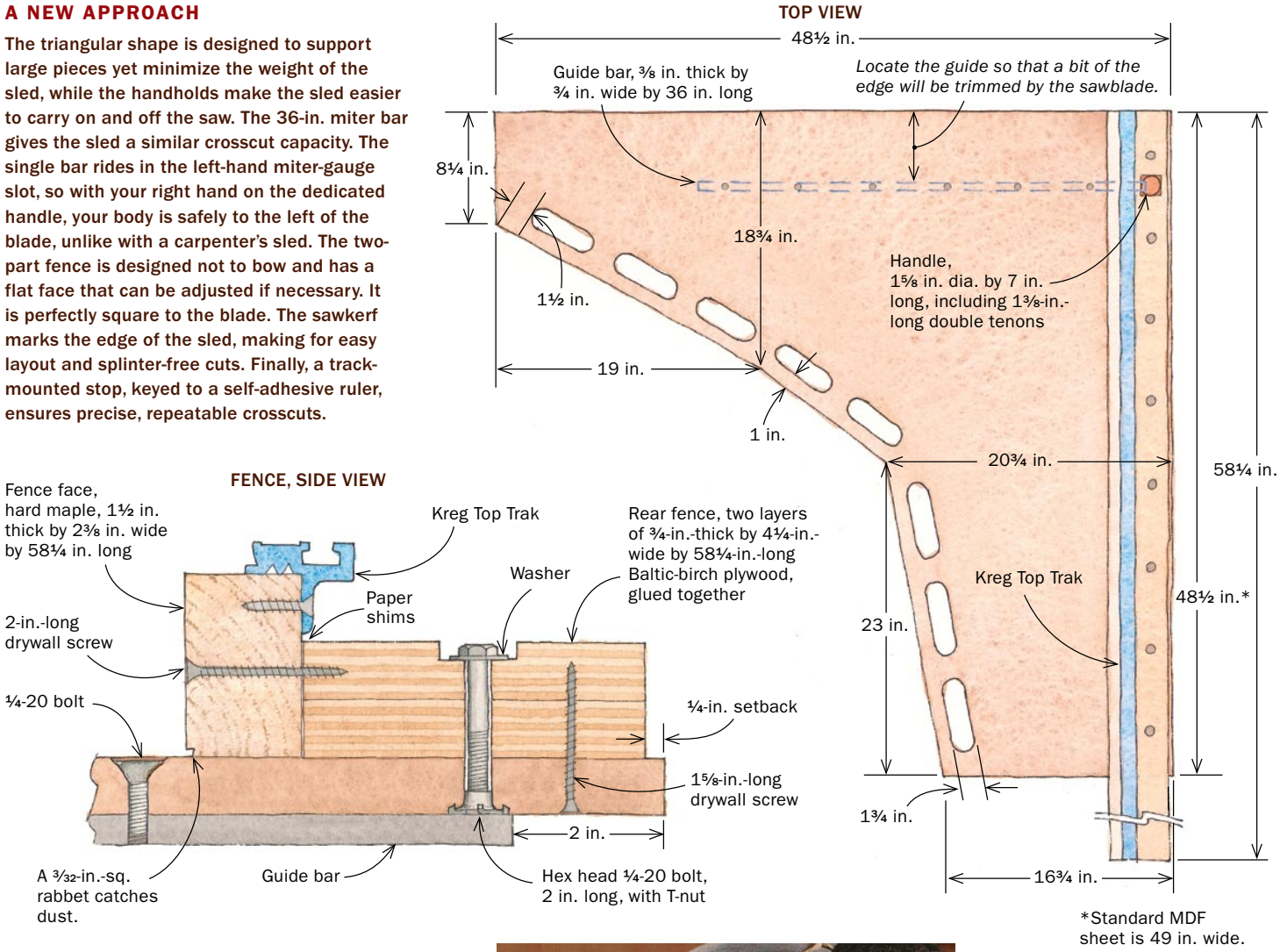

Artisanry at Boston University. Carefully made, it will crosscut large panels and long boards accurately, squarely, repeatably, and safely. This wide sled relies on extra support at its outboard end. On p. 69, I've included plans for a versatile sawhorse that will handle this job and many others.

Construct the bed and an adjustable fence

The bed of the sled is made from ¾-in.-thick medium-density fiberboard (MDF), which is flat and durable. Cut the initial square on the tablesaw, and then use a jigsaw to remove the triangular waste piece and make the cutouts. Round over the edges of the cutouts and just the upper edges around the perimeter. Keep the lower edges square to reduce dust getting under the sled.

Mark the location of the miter-slot bar so that the sled overhangs the sawblade position by ¼ in. This will be cut flush once the sled is finished.

A plywood fence is screwed to the bed—To get perfectly square crosscuts on any length of wood, the fence must be absolutely straight over

Make the bed

Start with a square of MDF. *Clamp it to a pair of sawhorses and cut away the waste section.*

Cut out the handholds. *Multiple handholds make it easier to maneuver the bulky sled on and off the saw, and also slightly reduce the weight.*

Add the fence and guide bar

1 ATTACH THE REAR PART OF THE FENCE

Locate the fence. *After drilling holes in the rear section of the fence, square it to the bed, clamp it, and tap a drill bit with a hammer to mark the location of the holes.*

Customize the nuts for MDF. *Designed to penetrate wood, the long spurs on the T-nuts need to be shortened to go into MDF. Attach a nut and a T-nut to one of the bolts used to secure the plywood fence to the bed of the sled. Working on the left-hand side of the T-nut so that the force pushes the nut onto the bolt, gently grind away about half of each spur.*

BOLT THE REAR FENCE TO THE BED

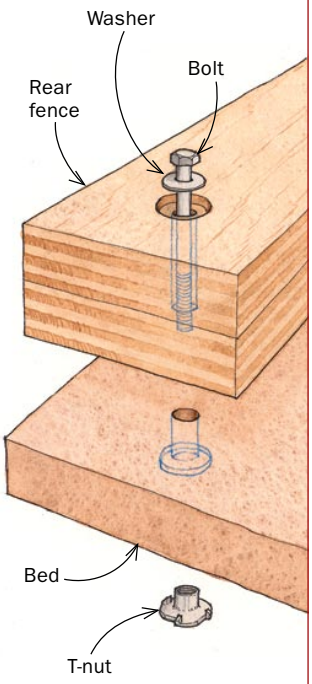

its length. To achieve this, the fence has two parts: a plywood rear section that is screwed to the bed of the sled, and a hardwood face that is added later. The rear piece gives the fence its stiffness. It consists of two layers of ¾-in.-thick Baltic-birch plywood laminated into a 1½-in.-thick by 4¼-in.-wide bar. True this up after lamination.

Lay out the fence-attachment holes so they miss the location of the miter-gauge bar. Using a Forstner bit, counterbore ⅞-in.-dia. holes, 5⁄16 in. deep, into the top of the fence. Then use a brad-point bit to bore 5⁄16-in.-dia. holes through these counterbores and through the fence.

Lay the fence on the sled table ¼ in. from the edge nearest the operator. That way, if the sled is knocked, the blow is absorbed by the bed and won't knock the fence out of alignment. Square the fence to the line marking the location of the guide bar, and clamp the fence to the sled table. Place the 5⁄16-in.-dia. brad-point bit in the fence holes and tap the bit with a hammer to transfer the location to the MDF. On a drill press with a fence, use a 1⁄16-in.-dia. bit to transfer the hole location to the underside of the sled. Turn over the bed and use a 1-in.-dia. Forstner bit to counterbore 3⁄32-in.-deep holes for T-nuts. Finally, bore all the way through the MDF with the 5⁄16-in.-dia. bit.

Before you attach the fence to the bed, you need to add a handle located right over the miter-gauge bar. I turn my handle on a lathe and double-tenon it into the fence, but you also can use a thick dowel glued into a drilled hole. Make sure the handle is far enough back on the fence so the flip-stop (added later) will slide by.

The fence is attached to the bed with ¼-20 bolts screwed into T-nuts sunk into the recesses in the bottom of the bed. Because the spurs on the T-nuts are designed to bite into wood, shorten them on a grinder so they'll work on MDF (see photos, above).

Add the guide bar—Turn the sled over so that both the fence and the location of the guide bar overhang the bench. The guide bar is attached to the bed with machine screws, but this involves drilling and tapping holes in the bar. If you've never done this, I suggest using a piece of extruded aluminum for the bar. Relatively soft, it drills and taps easily, but because the tolerances are less than for steel, you will have to dimple one side to create a tight fit in the miter slot. Mild steel is harder to drill

Attach the fence. *Tap the T-nuts into the underside of the sled, slide ¼-in.-dia. bolts through the fence, and then use a socket wrench to drive the bolts into the T-nuts.*

2 ATTACH THE GUIDE BAR

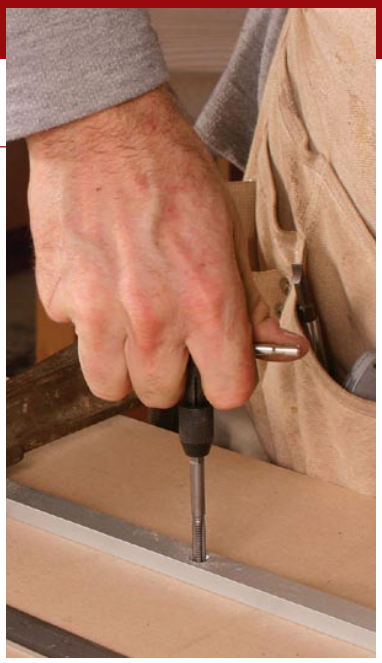

Drill and tap the guide bar. *McCormack uses a #7 drill and then taps the bar to take ¼-20 machine bolts.*

A machinist's trick

To create a tight fit in the miter slot, use a center punch to create dimples on the side of the guide bar nearest the blade. Place dimples ⅛ in. from the top of the bar, starting ¼ in. from the ends and spaced every 3 in. File the dimples to fine-tune the fit.

and tap but will wear better. Both bars are available at www.onlinemetals.com (aluminum, part No. 6061 T6; steel, part No. 1018 CF).Clamp the bar at the location you marked earlier, drill through both bar and sled, and then tap them with a ¼-20 tap. With the bar still clamped, working from the underside, countersink the holes on the top of the sled and screw flat-head machine screws through the sled into the bar.

The second part of the fence, the hardwood face, gets a 3⁄32-in.-sq. rabbet on its bottom front edge so dust can collect there instead of pushing the workpiece out of alignment during multiple cuts. You also need to drill and countersink holes in the face to attach it to the plywood back.

The top of the fence face receives a Kreg Top Trak, which comes in 4-ft. and 2-ft. lengths. You'll need two sections of track to extend the length of the 5-ft. fence. Drill and countersink holes along the track and attach it to the fence face with wood screws. Clamp the two sections of fence together, place shims between them to ensure that the face is dead flat, then screw them together.

Adjust the fence to cut square

Make the first cut on the sled to trim away the ¼-in. overhang on the bed and the fence. Then, to square the fence, make test cuts on a 2-ft.-wide by about 20-in.-long plywood panel. The panel needs a true edge to ride against the fence face, so hand-plane or edge-joint it dead straight. Make the first crosscut, flip the panel 180°, and cut the opposite side with the true edge of the board still against the sled. Measure the board's width near the sled fence and then at the far end of the board. If the fence is not at 90° to the sawblade, this test cut will double the observable error.

If the second measurement is greater than the first, you are cutting at more than 90°. Put a fine pencil mark on the sled's bed in

3 ADD THE FACE OF THE FENCE

A straight fence. *Clamp the two sections of fence together, and use pieces of paper as shims until a straightedge verifies that the front of the fence is perfectly straight.*

Join the two fences. *Once you're certain the face of the fence is straight, use 2-in. drywall screws to attach it to the back section of the fence.*

Square the fence

The first cut. *With the fence and miter bar attached, you can trim the bed flush with the blade. If you push the sled into the blade, very little of the miter bar is engaged in the slot at the start of the cut. It is safer to raise the blade through the first few inches of the sled.*

front of the face, unlock all but the right-hand attachment bolt, and rotate the fence slightly clockwise. The ¼-in. bolts in the 5⁄16-in.-dia. holes give you enough play. If the second measurement is less than the first, rotate the fence counterclockwise. Relock the fence and make two new test cuts. Keep adjusting until you are cutting a true rectangle. Then drive countersunk drywall screws through the underside of the bed into the plywood fence.

Apply a strip of right-to-left self-adhesive rule to the Top Trak, and then calibrate the cursor on the Kreg flip-stop.

Safe operations while using the sled

You are now ready to make perfect, square crosscuts and cut boards to the same length time after time. However, you should take precautions if you work near the capacity limits of the sled. When making a wide offcut, use a catcher keyed into the right-hand miter gauge and sitting level with the sled. This will support the offcut and prevent tearout near the end of the cut.

If you crosscut at the maximum width, be very careful that the sled does not see-saw out of the miter-gauge groove at the start of the cut, causing the sled and the workpiece to kick back. You'll also find it helpful to have an outfeed table for your saw; otherwise the sled could fall off at the end of the crosscut. It's a good idea to hang the sled on the wall when not in use so that it doesn't get damaged. □

TEST CUTS ENSURE THE FENCE IS SQUARE

The first cut. *Take a piece of plywood, about 20 in. sq., with one side perfectly straight. Place this side against the fence, mark the opposite side with a triangle, and cut one of the adjacent sides using the sled.*

The second cut. *Flip the test board 180°, keeping the same side against the fence, and cut the side opposite the first cut.*

Measure the difference. *Measure the width of the board adjacent to the fence and at the opposite end. If there is a difference, the fence isn't perfectly square to the blade.*

Adjust the fence. *There is a small amount of play in the bolt holes. Place a pencil mark on the bed of the sled next to the fence, loosen all but the right-hand fence bolt, and pivot the left-hand end of the fence forward or backward. Tighten all the bolts and make another pair of test cuts.*

John McCormack is a furniture maker and woodworking teacher in San Francisco, Calif.

Build an adjustable sawhorse

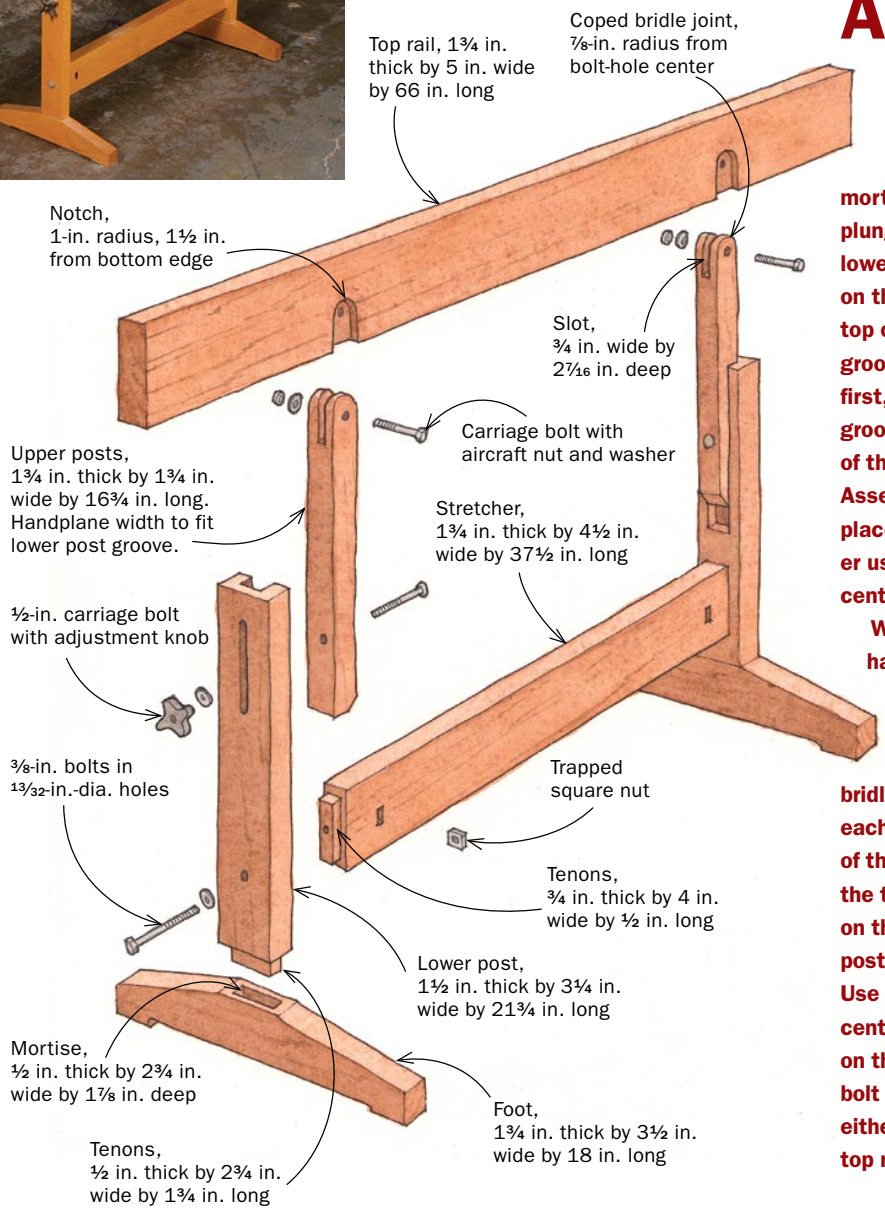

Although designed to be used with the crosscut sled, this sawhorse, or a pair of them, finds numerous uses in my shop. Finish-mill the parts to the correct dimensions, but leave the upper posts ¹⁄₃₂ in. extra thick to be fit to the lower post grooves later. Lay out and cut the trestle-foot mortises, using either a hollow-chisel mortiser or a plunge router, and then cut and fit the tenons on the lower trestle posts. Bandsaw the reliefs and tapers on the feet. Lay out the height-adjustment slots in the top outside faces of the lower posts, and the stopped grooves on the top inside faces. Plunge-rout the slots first, only just deeper than needed. Then dado the grooves and chop them square. Clean up the surfaces of the lower posts and feet, and glue them together. Assemble them to the stretcher and clamp them in place. Bore the holes for the bolts in the lower stretcher using the hole in the post as a guide, aiming for the center of the nut mortise.

With the base assembled, you can work on the top half. Handplane, scrape, or sand the upper posts to fit the stopped grooves in the lower posts. Bore holes for the ½-in.-dia. carriage bolts and chop the square relief for the bolt shank. The coped bridle joints allow the upper rail to pivot if the height of each leg needs to be different. Lay out the female part of the coped bridle joint on the upper post and bore the top ends for the ⁵⁄₁₆-in.-dia. bolt. Cut the bridle joint on the tablesaw and round the ends. Attach the upper posts to the lower base with ½-in.-dia. knobs and bolts. Use the tight structure to lay out the location of the centers of the two male parts of the coped bridle joint on the lower edges of the upper rail. Bore the ⁵⁄₁₆-in.-dia. bolt holes first, and then plunge-rout away the waste on either side of the male part of the bridle joint. Wax the top rail, assemble the horse, and put it to use.

Set up the sled horse. *Use a level to ensure that the top rail of the horse is even and parallel with the top of the tablesaw. The coped bridle joints allow the horse to be used on uneven floors.*

Mark its position. *Once you have the sawhorse set, mark the point where the stiles meet, and where the feet are located on the floor. Now you can use the horse elsewhere and reset it quickly.*

Locking blocks. *If you are worried about the combined weight of the sled and a heavy workpiece causing the horse to shift, clamp a custom-size block into the gap below the upper stile.*

Dado Jig Is a Cut Above

Clever guide guarantees a perfect fit for shelves of any thickness

BY KENT SHEPHERD

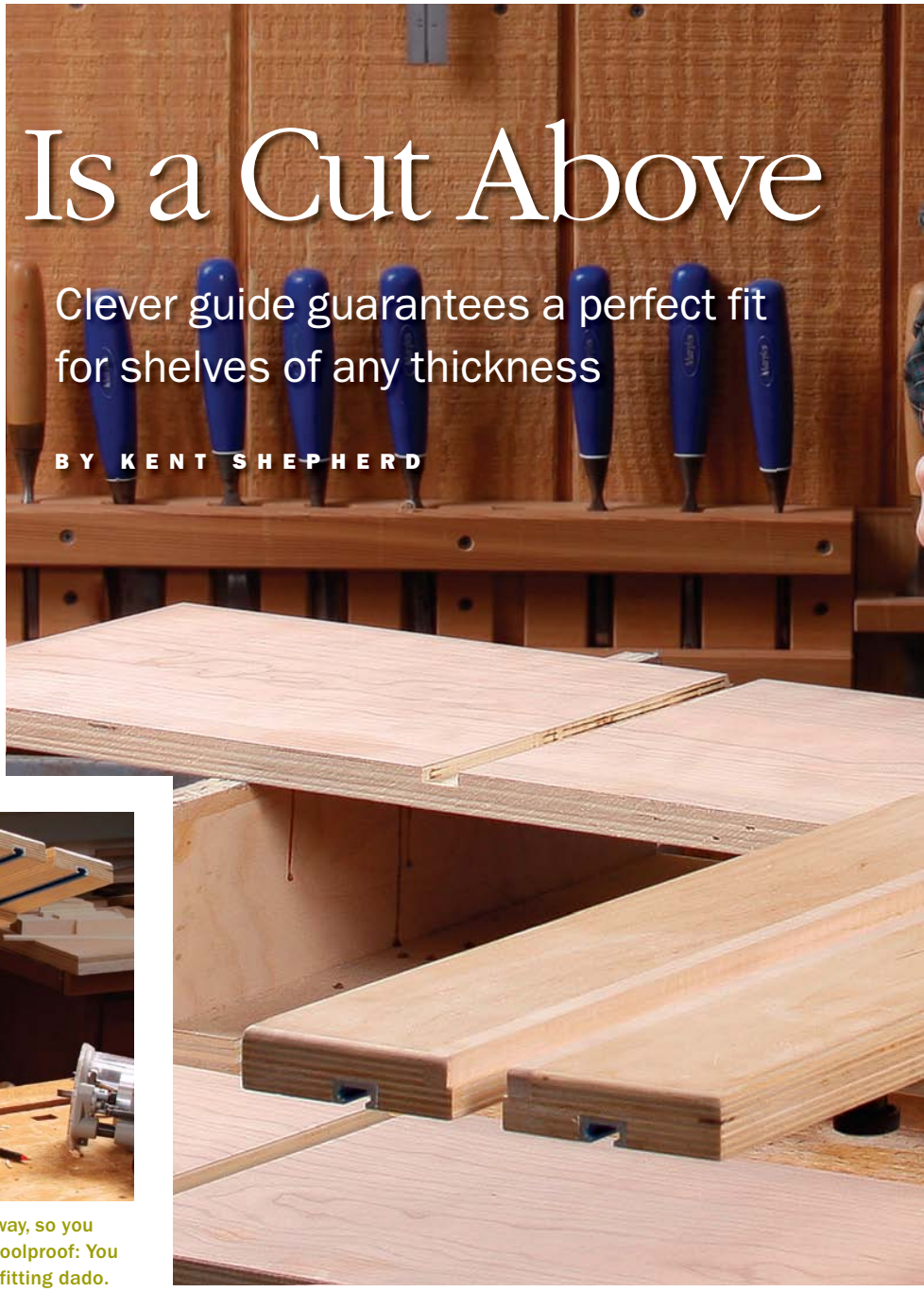

I got my first job in woodworking when I was 9 years old, cleaning up the shop at my father's shutter business in Lubbock, Texas. When I was 12, Dad let me start using the tools. Early on, I learned a lesson that I carry with me today in my own cabinet-door business—the value of jigs for both speed and safety.

At work and in my home shop, I use dadoes often in a variety of ways, from housing fixed shelves and vertical case partitions to drawer construction. Traditional router jigs involve wrestling with C-clamps to hold them in place and require calculating offsets to align the jig, and in turn the bit, with the location of the dado.

Neither of those requirements appealed to me,

3 STEPS TO A DEAD-ON DADO

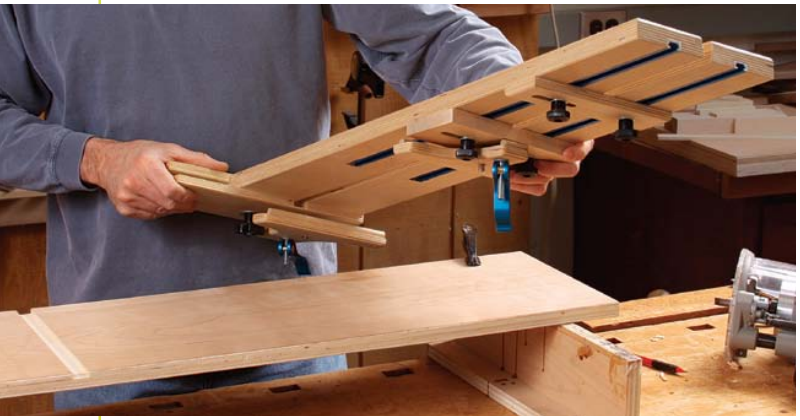

The clamps are underneath, to stay out of the router's way, so you have to elevate the workpiece. But after that the jig is foolproof: You use one of your actual shelves to adjust it for a perfect-fitting dado.

1 USE A SHELF TO SET IT UP

Set the guide rails. *The lower parts of the guide rails show exactly where the router will cut. For a perfect fit, snug the rails up to a shelf, then tighten the adjustable rail.*

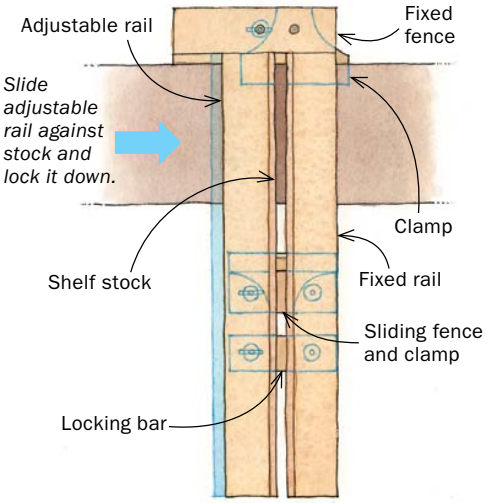

2 ALIGNMENT IS SIMPLE

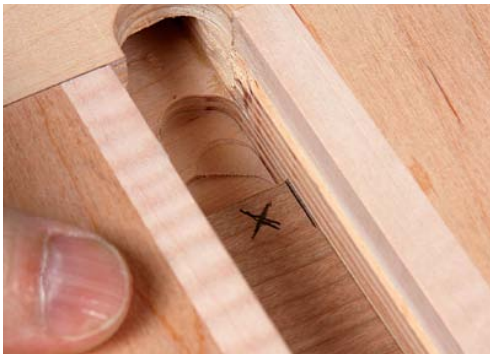

Just a pencil line. *All you need is a mark on one edge of the dado, with an "X" to show the waste side.*

Photos: Kelly J. Dunton; drawings: Jim Richey

so I created this router jig instead. I started with an adjustable, twin-rail design that calls for using a guide bushing in the router. By custom-fitting the jig with the bit and bushing I planned to use for cutting the dadoes, it's easy to locate and set up the cuts by eye. The innermost edges of the rails show exactly where the bit will run, so you don't have to factor in the offset between the bit and bushing when setting up a cut. The twin rails—one fixed and one adjustable—make it easy to cut a dado to custom width, exactly matching the thickness of the part it will house.

To do away with C-clamps, I added an integral clamping system that makes it easy to secure the workpiece and lock the jig in place. These built-in clamps can handle stock from ⅜ in. to 1 in. thick, and they work from underneath, so they don't interfere with the router's travel. With them, I can quickly release and reposition the jig while keeping the setting for my dado's width. This makes speedy work of tasks like cutting multiple shelf dadoes in a case side.

The adjustable rail lets you set the jig for a dado that will precisely match the thickness of the mating piece it will house. And one final benefit of the jig is that its inner edges act to prevent chipout along the edges of the cut. It's a bit of work to build, but the reward is having the world's most reliable dado jig.

Two rails make for straight cuts

The rails are made from two layers of ½-in.-thick plywood, face-glued together. The inside

The genius of the jig is the offset rails, which both guide the bushing and show exactly where the bit will cut.

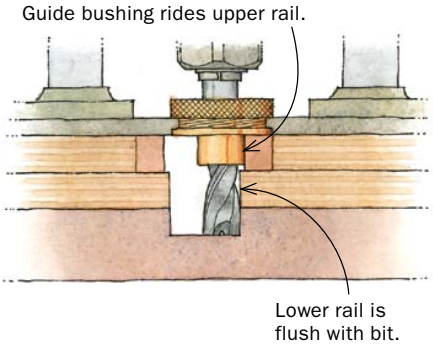

3 LOCK IT DOWN AND ROUT

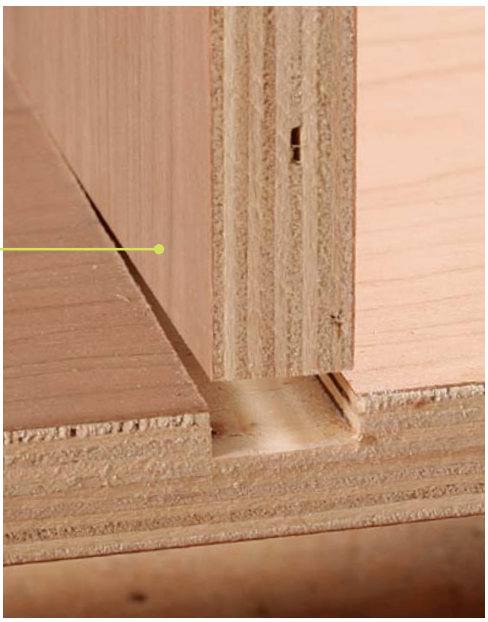

Clamp and go. *The cam clamps lock the jig in place quickly, and it's easy to ride each rail for a perfect-fitting dado every time!*

Making the jig: Rails first

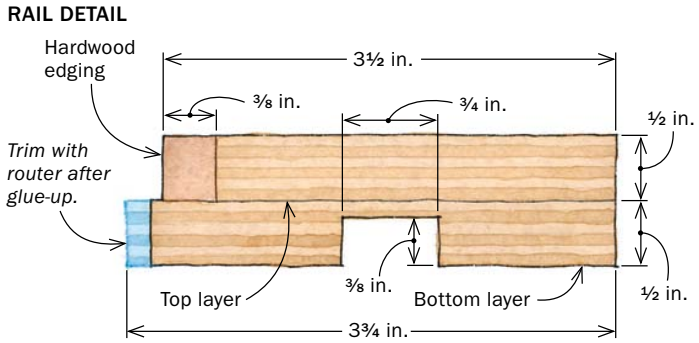

Built to last. *Hardwood edging gives the router's guide bushing a long-wearing surface to ride on. Edge-glue the strip in place and sand it flush.*

ULTIMATE DADO JIG

Shepherd's jig is built around a rigid square, with two rails that guide the router bushing, one fixed and one adjustable. Each rail has two layers, which are offset to account for the distance between the bit's cutting edge and the guide bushing. Built-in clamps are underneath, one on the fixed fence, and the other attached to a sliding fence. There is also a locking bar that keeps the far end of the guide rails in alignment.

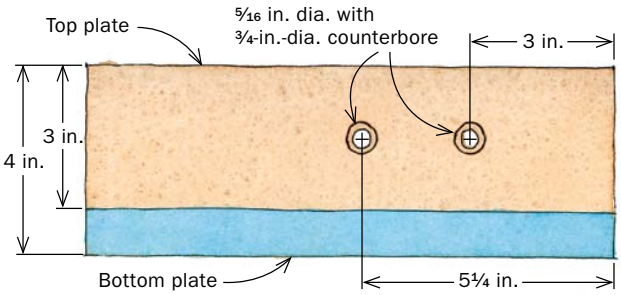

FIXED FENCE ASSEMBLY

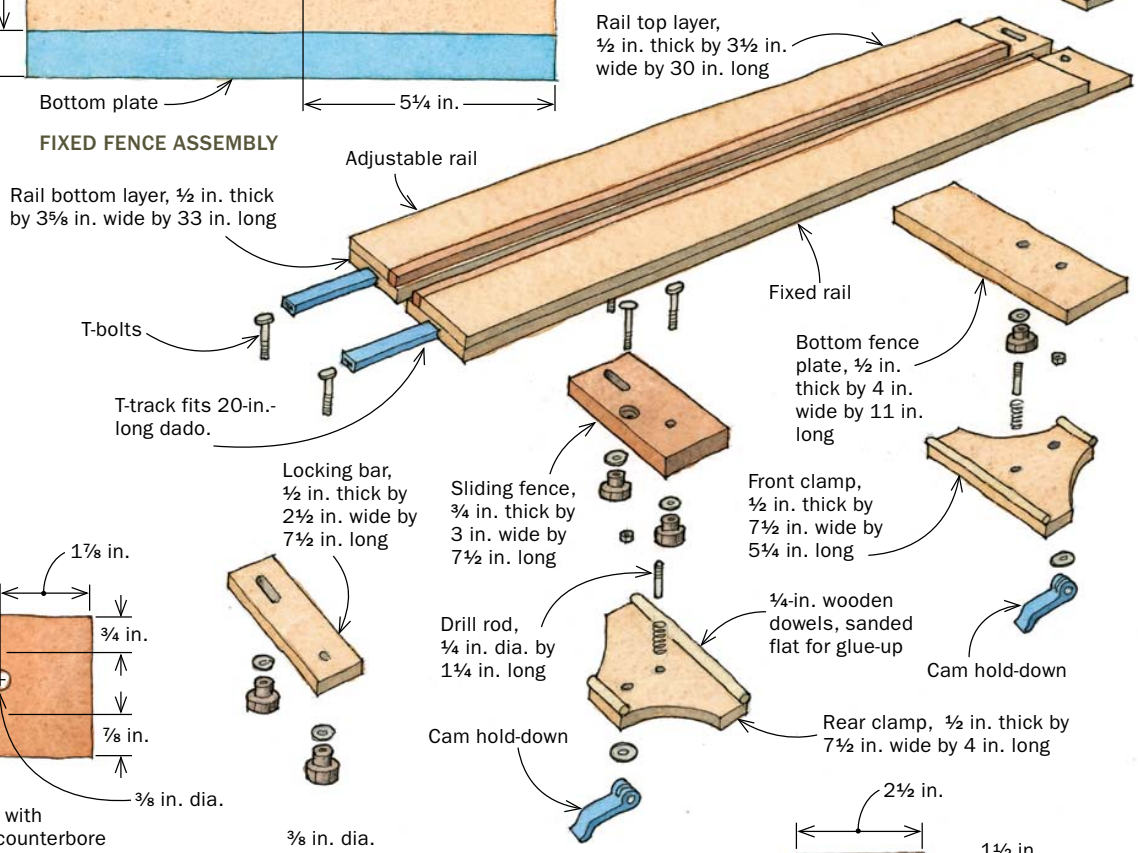

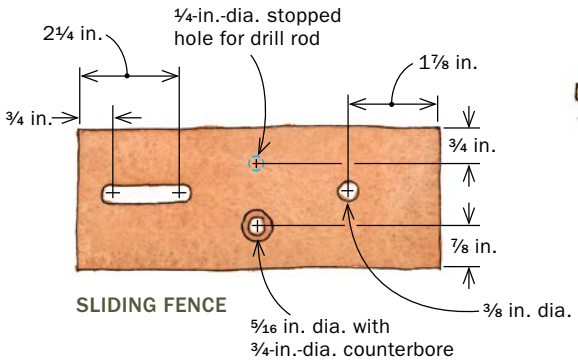

SLIDING FENCE

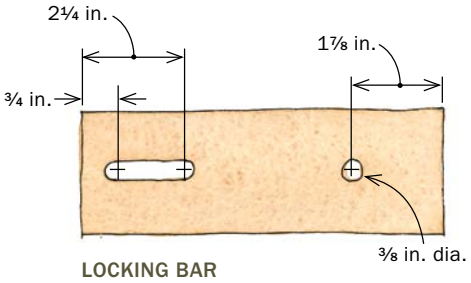

LOCKING BAR

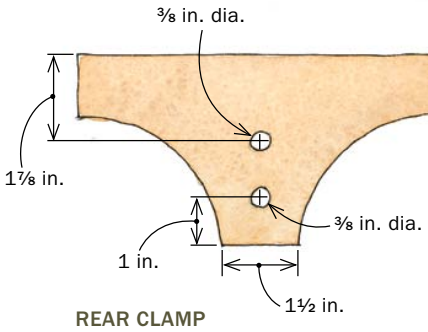

REAR CLAMP

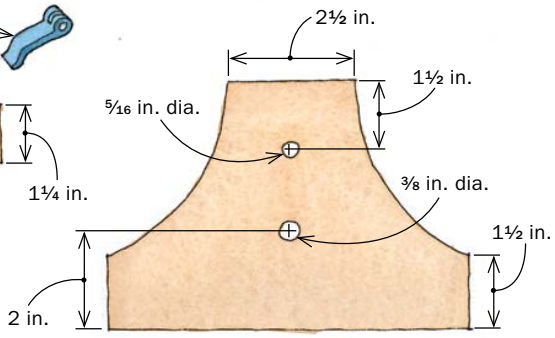

FRONT CLAMP

Offset layers make up the rails. *Leave the bottom layer wide at this point. Alignment is not super-critical, as you will be trimming the bottom rail with the router afterward (see lower right photo).*

Put tracks under the rails. *Rout a ¾-in.-wide stopped groove on the underside of each rail (above), then square up the ends of the groove with a chisel (right). Mount a length of T-track (below) for securing the sliding clamp and locking bar.*

edge of the top layer has a strip of hardwood for the guide bushing to ride against. The bottom layer of each rail is longer, for attaching to the jig's right-angle fence, and wider to accommodate the offset between the router bit and the guide bushing. When the jig is assembled, one rail is fixed and the other adjusts to set the width of the dado. An elongated mounting hole drilled in the sliding rail lets it travel back and forth while the clamps are loose.

When face-gluing the top and bottom layers of each rail, pay close attention to how the layers are oriented. Viewed side-by-side, the two rails should mirror one another, with the extra length of the bottom layers at the same end and the extra width toward the center. After the glue dries, use a router to trim the inside edge of each lower rail, tailoring it to fit the bit and bushing that you'll use to make dadoes. I use a ⅝-in. bushing with a ½-in. upcut spiral router bit. Later, if you want to cut dadoes narrower than ⅝ in., be sure to use a bit-and-bushing combination with the same offset that you cut into the jig.

With the bit and bushing installed, make a pass against each rail, with the bushing riding tight against the upper rail. The trimmed lower rails will perfectly define the limits of the bit's travel and, therefore, can be used for perfectly aligning the jig for dado cuts.

Last, use the router table to cut a stopped groove in the bottom of each rail. Once this is done, you can install the lengths of T-track that will hold the sliding fence and locking bar.

A square glue-up is key—The next step is to glue the fixed fence to the fixed rail. The tongue end of the fixed rail fits between the top and bottom plates of the fence. The bottom plate of the fence assembly is the reference surface that ensures your dadoes will be square to the edge of the workpiece, so it must be perfectly 90° to the fixed rail.

To keep things square during glue-up, attach the top and bottom plates of the fence one at a time, letting the glue dry between

SOURCES OF SUPPLY

CARRIAGE BOLTS, NUTS, WASHERS, SPRINGS, AND DRILL ROD

Available at local hardware stores

T-TRACKS, T-NUTS, FIXTURE KNOBS, AND CAM HOLD-DOWNS

rockler.com
woodcraft.com

Custom tailoring. *Trim the bottom layer of the rails with the same bit and bushing you'll use to cut dadoes. A smooth, straight cut is critical, so be careful not to tip the router.*

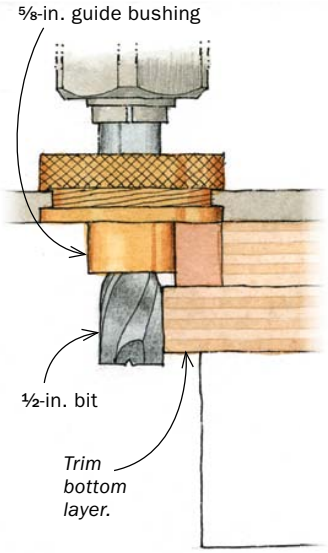

Add the fence

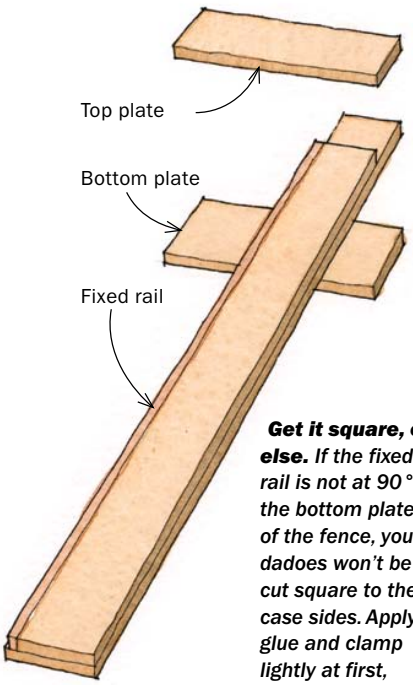

Get it square, or else. *If the fixed rail is not at 90° to the bottom plate of the fence, your dadoes won't be cut square to the case sides. Apply glue and clamp lightly at first, checking for square frequently as you add clamps.*

Attach the top of the fence. *The top plate of the fence is only there to support the router at the beginning of the cut.*

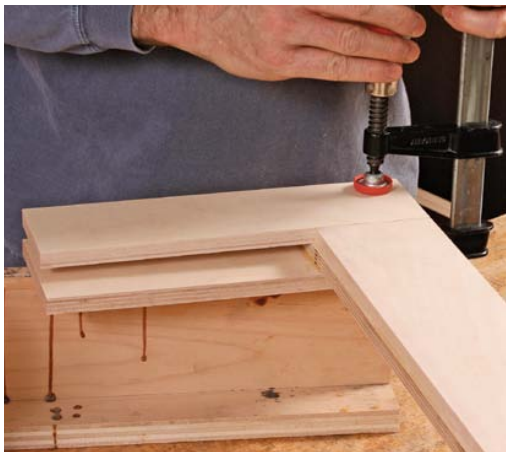

The top should be flush. *Use the same plywood for the top surfaces of both the fixed fence and fixed rail. This ensures smooth travel for the router and no unwanted variations in the cut.*

steps. Apply the glue and lightly clamp each fence plate in place with a single clamp. After checking for square, use more clamps to apply greater pressure.

Install the hardware

Underneath, a pair of clamps secures the work to the underside of the jig and against the fixed fence. One is bolted to the fixed fence and the other is attached to a sliding fence that rides in the twin T-tracks. Each clamp applies pressure via a piece of plywood. A dowel glued along the plywood's back edge lets the clamp pivot freely during adjustment; another attached along the front edge grips the workpiece. A spring keeps the clamp open before tightening, making it much easier to reposition the work between cuts.

Also underneath the jig are several fasteners used to lock down the sliding fence and the adjustable rail. To install this hardware, first drill two counterbored holes through the fixed fence. These holes will hold a pair of carriage bolts—one to secure the clamp underneath and the other for the adjustable rail. With the holes drilled, insert the slotted end of the adjustable rail between the open holes and epoxy the carriage bolts in place. Use a washer and 5/16-in. nut to temporarily tighten from the bottom to seat the bolts into the jig. After the epoxy sets up, remove the washer and nut.

Another carriage bolt mounts the second clamp to a sliding fence, which rides in the T-tracks on a pair of T-bolts. A second block also sits in the T-tracks and is used to lock down the "outboard" end of the adjustable rail.

The jig is simple to use

To use the jig, you'll need to elevate the workpiece off the bench to accommodate the clamps underneath. A pair of simple T-shaped risers works great. Mark your workpiece exactly where you want the dadoes, and set the jig on the workpiece. Don't fasten it in place just yet.

Start by setting the dado's width. Place in the jig a scrap of the stock that will need to fit into the dado. Bring the adjustable rail tight against this scrap and use the star knob and T-nuts underneath the fixed fence and the locking bar to secure both ends of the rail. For a dado that will still be snug but a little easier to assemble, use a piece of masking tape as a shim between the scrap and the adjustable rail.

With the width set, go ahead and position the jig. Set the inside edge of the fixed rail on the appropriate layout line and bring both the fixed and sliding fences tight against the edges of the

Install the hardware

Drill and counterbore. *Drill the larger holes in the fence first, to accommodate the heads of the carriage bolts, and then bore through-holes.*

Attach the hardware. *The bolts hold the cam hold-down for grasping the workpiece and the star knob that secures the adjustable rail.*

Assemble the clamps. *They are a smart assembly of cam clamps, pins, bolts, knobs, and springs.*

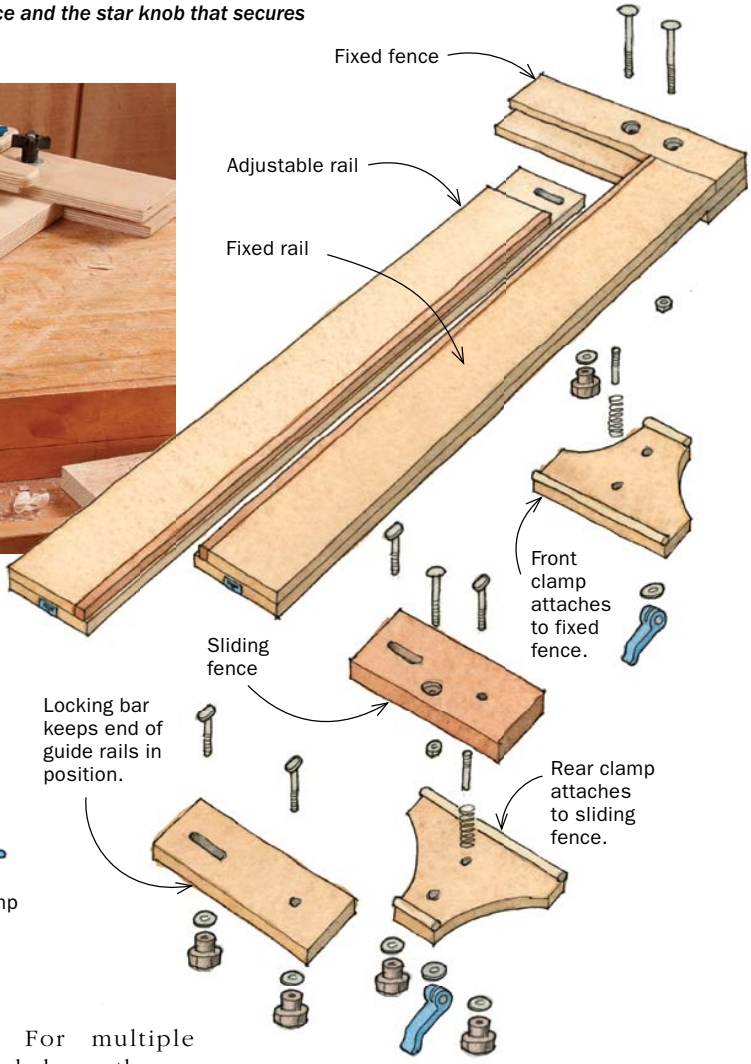

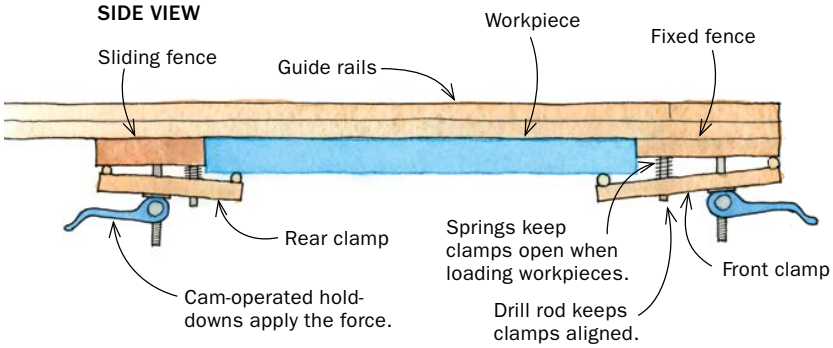

workpiece. Now use the cam clamps and the other fasteners on the fixed and sliding fences to lock the workpiece in place and hold it snug to the bottoms of the rails.

Now you are ready to cut. Start at the end closest to you, with the router on the jig; rout down the left side, and come back toward you on the right side. To avoid excess strain on the router, take repeated passes at incremental depths until you have the proper depth.

For multiple dadoes, the cam clamps make it easy to release the clamp pressure on the workpiece while keeping your dado-width settings. This means you can quickly reposition the jig and then retighten it for the next cut. □

Kent Shepherd operates Shepherd Woodworks in Lubbock, Texas.

Perfect Tapers on the Tablesaw

Make tapered legs of all types, quickly and safely

BY STEVE LATTA

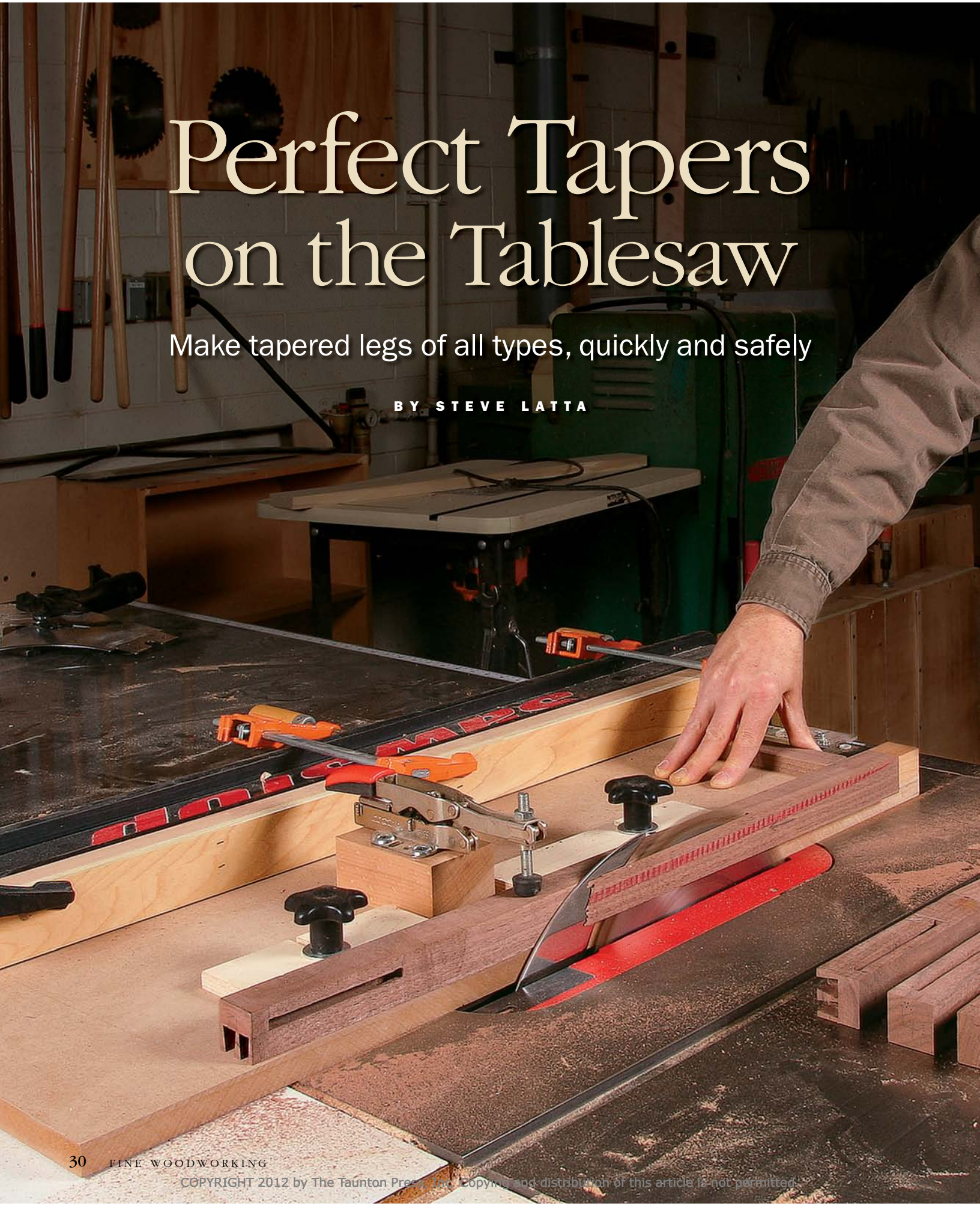

It's no secret why woodworkers taper the legs of tables and chairs: It improves the appearance of the entire piece. Tapering breaks up that boxy square look, lightens the visual weight, and helps direct the eye toward the center.

Tapered legs are found across the range of furniture styles. The majority have tapers on two adjacent faces that begin just below the apron or rail, keeping the joinery square. But you can also find tapers that extend to the top of the leg, and tapers on all four sides. What they all demand is a way to cut them accurately and safely.

While you can cut tapers on the bandsaw or the jointer, tablesaw cuts are cleaner and more accurate. However, the standard commercial tapering jig (two aluminum sections hinged on the end) has always scared me—strike that—terrified me. Because the workpiece isn't clamped to the jig, your fingers have to come dangerously close to the blade.

Why I favor foolproof

At the college where I work, many of my students are new to woodworking, so any jig has to be simple and safe to use. The jig we use to taper legs ticks both these boxes. It falls under the broader category of what I call carriage jigs, in that the work is carried on some sort of sled. Because one edge of the sled lines up with the path of the blade, setting the location of the workpiece is very easy, and with a built-in clamp to secure the workpiece, your hands remain well clear of the blade.

Instead of the sled being guided by the miter slot, as in most cases, I have it hooked to the fence. If the sled only rides in the

Tapered legs on fine furniture. *You need a jig that can make dead-accurate tapers on two, three, or four sides.*

A SMARTER SLED

The sled is guided simply and safely by an L-shaped guide that clamps to the rip fence, and a little hardwood strip that is nailed to the sled.

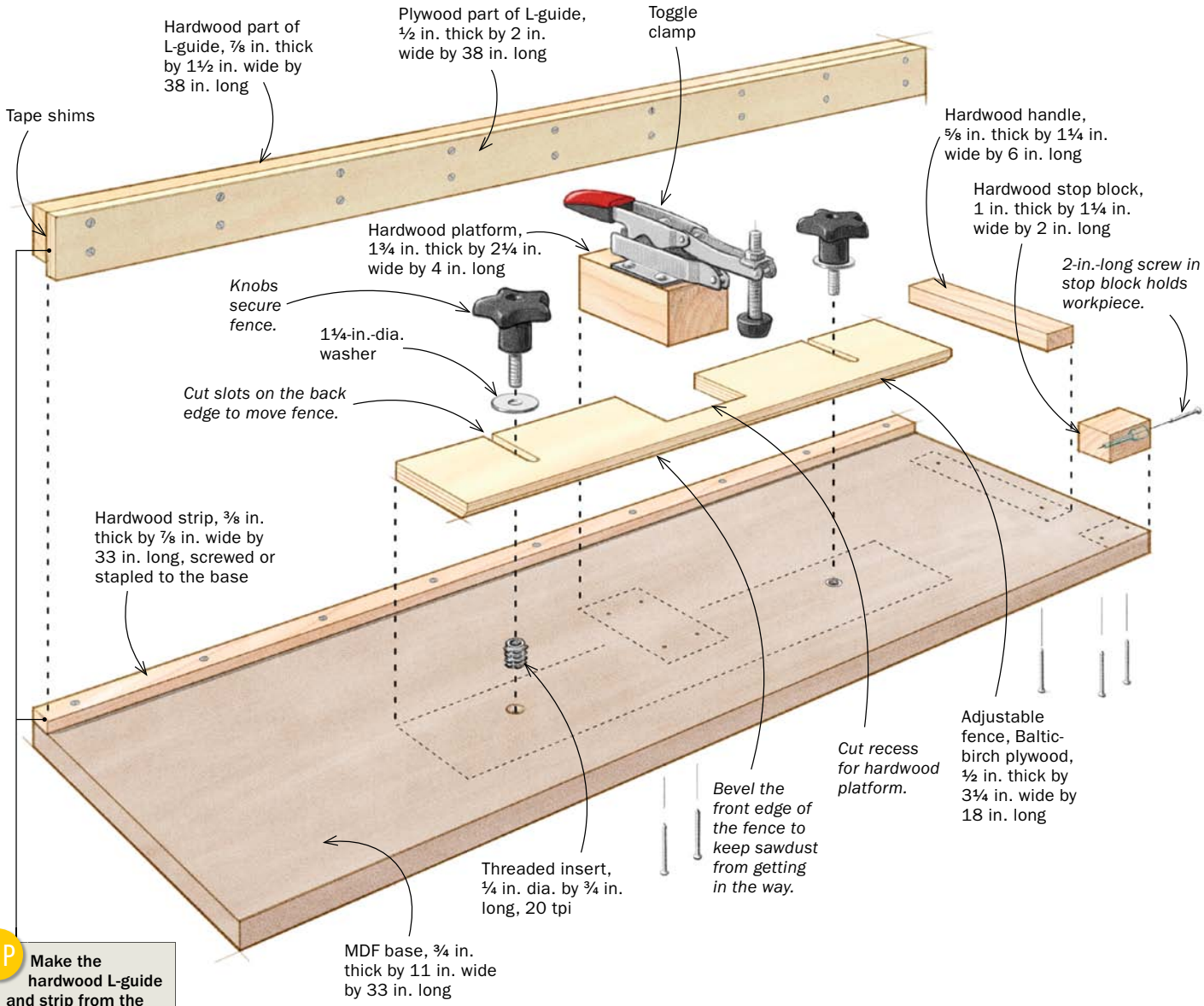

TIP Make the hardwood L-guide and strip from the same piece.

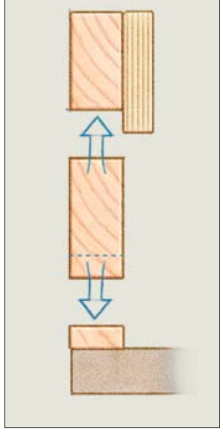

miter slot, it wants to dip and come out of the slot before and after the cut. Some people try to use one knee to support the sled while doing an odd little one-legged dance in front of the spinning saw. Not with this sled. It is tied to the fence with an interlocking strip that keeps it flat on the table at all times.

What's more, one edge of the jig is near-zero-clearance, so it tells you where the blade will cut. That means you can simply align the layout marks on a leg with the edge of the jig, and cut with confidence.

Construction is straightforward

To make the jig, start with a piece of hardwood, roughly ⅞ in. thick by 2 in. wide by 38 in. long, rip off a ⅜-in.-wide strip, and cut it to 33 in. long. This strip will ride against the rip fence, so you want it just proud of the edge of the sled. To achieve this, place a piece of masking tape along the edge of the sled, place the strip and the sled base against the rip fence, and then glue and either screw or staple the strip to the sled. Peel off the tape, and you're all set.

The two long sides of the sled must be parallel, so with the sled riding against the rip fence, trim the opposite side. But before you do that, attach the stop block, so it gets trimmed flush, too. Afterward, attach the sled's adjustable fence, push handle, and toggle clamp.

An L-guide locks the jig parallel to the fence yet allows it to glide smoothly with no slop. To make the

Photos: Mark Schofield; drawings: John Hartman

MAKE IT IN ONE HOUR

The guide strip and fence are easy to attach and fine-tune. The other parts go on quickly.

ATTACH THE GUIDE STRIP

To keep the wood strip just proud of the MDF, temporarily attach a strip of masking tape to a long edge of the base. Push both pieces against the fence as you screw or nail them together.

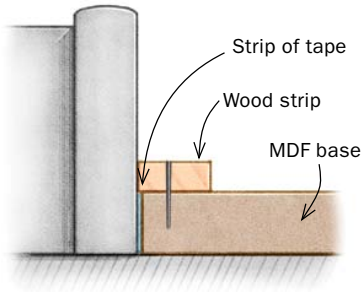

Trim the other edge. *After attaching the stop block, trim the edge of the sled and the block at the same time. Those surfaces will tell you exactly where tapers will be cut.*

guide, glue and nail or staple a 2-in.-wide by 38-in.-long strip of ½-in.-thick plywood to the remaining piece of hardwood that you ripped earlier. Place the side of the base with the maple strip adjacent to the saw's fence and clamp the guide to the fence. Check to see if the sled slides back and forth. If it is too tight, simply add a strip or two of blue painter's tape to the hardwood side of the guide before re-clamping it and testing the movement again.

Two-sided tapers are the most common

On traditional furniture across a range of styles, there is a basic rule for which faces of a leg to taper: If it falls under the aprons, it gets tapered. A tapered leg lends a piece the lightness and grace mentioned earlier, plus gives it a stable-looking stance without making it look splay-legged. On a typical four-legged table with a rectangular top, or

Add the adjustable fence. *Screw threaded inserts into the base of the sled. These will receive the knobs that secure the sled's adjustable fence. File the inserts flush with the underside of the sled to avoid scratching your saw.*

MAKE AND FIT THE L-SHAPED GUIDE

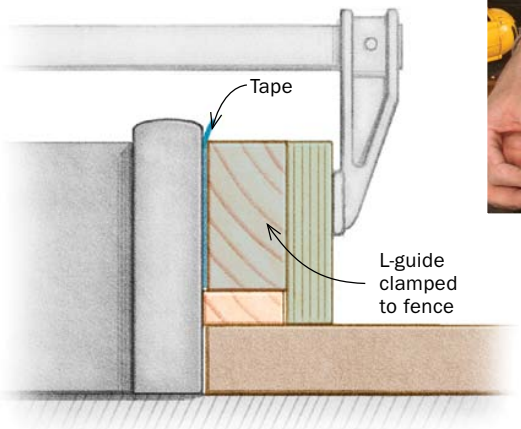

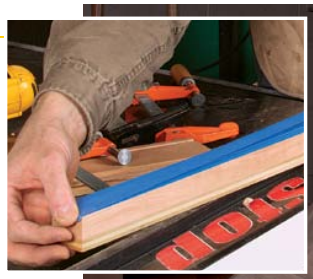

Smooth sledding. *Attach the sled to the fence via the L-guide and see how easy it is to push (right). You may need to add a strip or two of masking tape to the L-guide to allow the sled to slide smoothly but without slop.*

TWO-SIDED TAPERS IN MINUTES

You need to set up the sled only once to cut tapers on two adjacent sides, but lay out each leg to keep track of your cuts.

Align the foot. *Line up the layout mark with the edge of the sled and stop block, and push the leg gently against the screw in the block.*

Align the top. *You need only a small tick mark at the start of the taper. Line it up with the edge of the sled, then slide the adjustable fence against the back of the leg blank.*

Adjust the rip fence. *You want the edge of the sled to be about 1/32 in. away from the blade. In this way the taper is cut slightly proud to leave room for handplaning and sanding.*

MAKE THE FIRST CUT

Adjust the jig and cut the first taper.

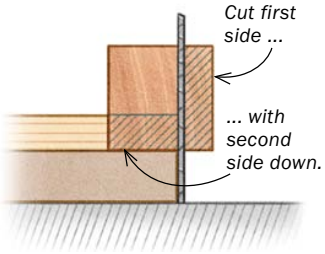

ROTATE FOR NEXT CUT

There is no need to adjust any setting; just reposition the leg while the blade is spinning and clamp it down.

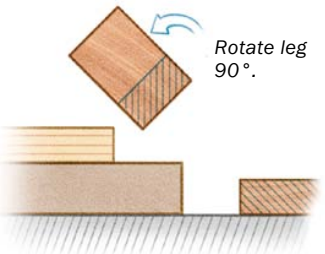

CUT THE SECOND TAPER

With the first taper facing up, make the second tapering cut.

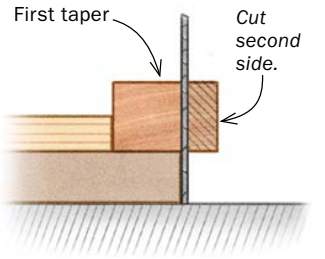

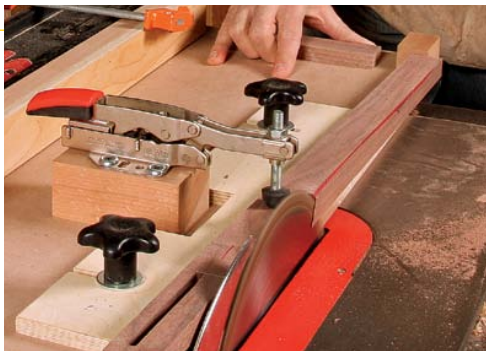

SEE IT IN MOTION

even variations such as a bow or serpentine front, the two inside faces of the legs are tapered. To show how the jig works, I'll cut one of these legs.

First, cut any joinery on the leg. It is much easier while the blank has straight sides. Layout, or more accurately the lack of it, is another advantage to this jig. A line marking the start of the taper and another on the bottom of the foot are all you need. The taper usually starts where the bottom of the apron or rail intersects the leg. I use a combination square to set the lines on the top, being careful to mark only the sides to be cut. Too many lines leads to mistakes! If the taper has a finished dimension of, say 5/8 in. at the bottom, I cut a piece of stock that thick, line up the blanks, and mark the bottoms with one swipe of the pencil. I rotate each leg 90° and make a second mark. Finally, I use a wax crayon to highlight the faces to be tapered.

When using the sled, the thin end of the tapered leg should always be closest to the operator. This way not only are you cutting "downhill" with the grain, but the action of the blade helps push the blank onto the sled. You also want to rotate the leg clockwise after the first cut, so the leg is resting flat on a non-tapered face during the second cut (see photos, left).

To position the leg in the sled, align the mark on the bottom of the foot with the edge of the sled and push the foot into the tip of the screw protruding from the stop block. Now align the start of the taper with the edge of the sled and set the adjustable fence against the leg. Finally, deploy the toggle clamp. Leave a little extra material to handplane and sand by setting the saw fence so that the side of the sled is about 1/32 in. from the blade. Make the cut, using the handle to push

FOUR-SIDED TAPERS? JUST ONE EXTRA STEP

Set up for tapers three and four. *After cutting the second taper, rotate the piece clockwise and align the marks with the sled as before (left). This time, because the opposite side of the leg has already been tapered, you'll need to move the adjustable fence (right).*

Cut tapers three and four. *There is no need to adjust the fence after the third cut, but you might need to adjust the toggle clamp or place a shim under it to maintain pressure on the thinner leg.*

the sled so that your fingers come nowhere near the blade. Pull the jig back to the front of the saw, loosen the clamp, rotate the leg 90° clockwise, and secure it again. Cut the second taper. When cleaning up the saw marks, don't remove any wood above the taper because this will leave a gap between the leg and the apron. To sneak up on the line, I mark the area below the line with a crayon, and then plane up the marked area, stopping just before the line. A final light sanding completes the job.

Three or four-sided tapers are no problem

On a round or oval period table with corresponding shaped aprons, the legs can be tapered on three or four faces. Further, on contemporary furniture, it is common to find legs tapered on four sides, often extending all the way to the top, or even inverted with the wider part at the base of the leg. Never fear, this jig can handle all of these tapers and then some.

For example, with four-sided tapers, cut the first two adjacent sides as above. To cut the last two sides, first adjust the sled's fence to take into account the tapered side of the leg that will now be against it. After cutting the third taper, you may need to place an offcut under the blank to support it during the fourth cut. □

Contributing editor Steve Latta teaches at Thaddeus Stevens College of Technology in Lancaster, Pa.

CLEAN UP THE CUTS CAREFULLY

Precise planing. *To avoid extending the taper too far, mark the surface of the leg a few inches below the layout mark with a wax crayon (right). This makes it easier to measure your progress and to stop before you reach the line (far right).*

Upgrade Your Router with Shop-Built Bases

Four custom bases unlock the tool's versatility

BY JEFF MILLER

A router is a very simple woodworking machine; at its most basic, it's a device that spins a cutting tool. This simplicity is a virtue, however, and is the reason the router is so incredibly versatile.

But the router needs some help to unleash its full power. One way is with custom bases. Once you realize you can attach your own sub-base to a router, you open up many possibilities.

The simple bases in this article help with a variety of tasks: They stabilize the router for otherwise risky cuts, they quickly and cleanly trim furniture components flush, and they make mortising a snap. The cost for this added versatility is a few scraps from your wood bin, and the few minutes it takes to put each base together.

An oversize base for edge profiles

One common routing problem involves cutting edge profiles, an operation that puts more than half the router off the edge of your workpiece. This is manageable when the edge profile is small, but can be quite unstable with a larger router bit.

You gain a great deal of control over the operation with an oversize base, which helps prevent the router from tipping off the edge. This is important because even a small wobble can cause the bit to dig in and dent your perfect profile.

Start with a piece of plywood roughly 9 in. by 12 in. and drill or rout a 3½-in.-dia. hole about 2¼ in. from one end. Drill and countersink holes in the plywood so you can attach it to the router, with the collet centered over the base's opening. If you remove the router's existing plastic sub-base, you can use the holes in it as a template for drilling

Photos: Steve Scott

1 Wide base for edge-profiling

For better balance, a bigger footprint. *An oversize base gives you greater control when routing an edge with large profile bits. Use the router's plastic sub-base as a template for drilling the mounting holes.*

2&3 Two bases for flush-trimming

TRIM EDGE-BANDING

Elevate the base. *Adding a partial bottom layer (above) prevents the base from bumping into the projections you want to trim flush, like the solid edging on the veneered panel at right.*

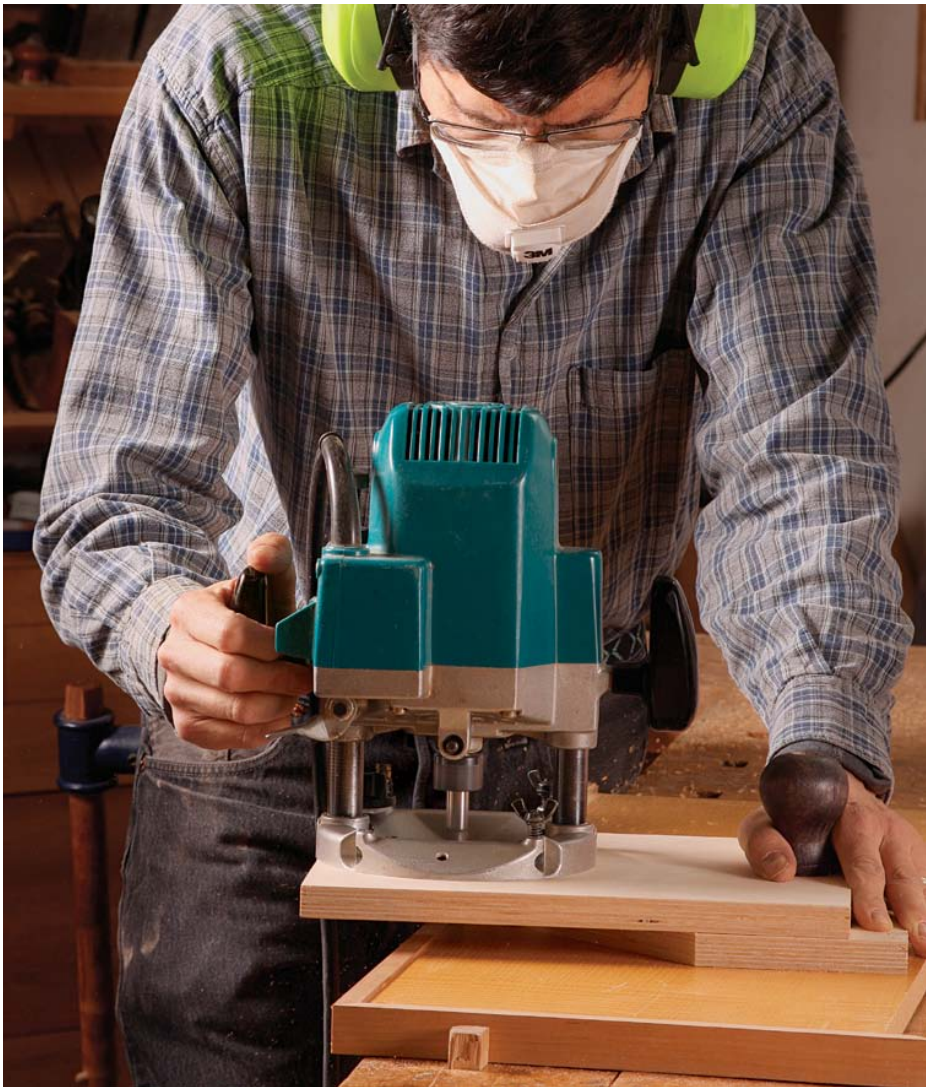

Trim solid edging. *The angled front on the bottom layer lets Miller work all the way into the corners on this veneered top. He starts with a climb cut on the outermost edge to reduce tearout. The bit is set to leave just a bit of edging to be scraped and sanded flush.*

holes in the plywood. You'll need some longer screws that match the thread size on the ones that attach the existing sub-base; bring one with you to the hardware store to be sure you get the right size.

Once you've attached the plywood to the router, add a handle to the top side of the plywood, roughly 2 in. from the end opposite the router. I bolted on a knob from an old router, but a knob from a handplane or the like is perfect, too. Smooth and then wax the bottom of the jig, or use melamine board, or even a scrap of solid-surface countertop material (such as Corian) so the base will move easily on a surface. Rounding over the edges a bit helps, too.

Now you have a base that will give you the leverage to keep the router upright while cutting those edge profiles.

Two bases that simplify flush-trimming

The oversize base can be modified for trimming a row of projecting dovetails or

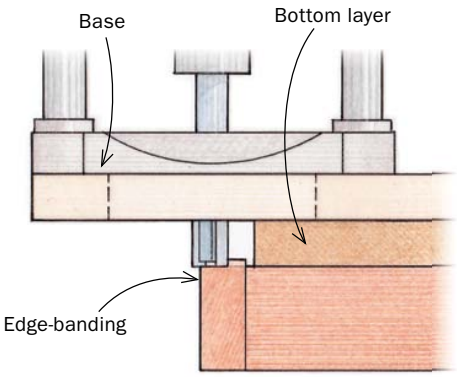

TIP **A CLEAN CUT FOR DOVETAILS**

A bottom layer with a straight front edge is great for flush-trimming dovetails.

Drawings: Vince Babak

TRIM PLUGS AND TENONS

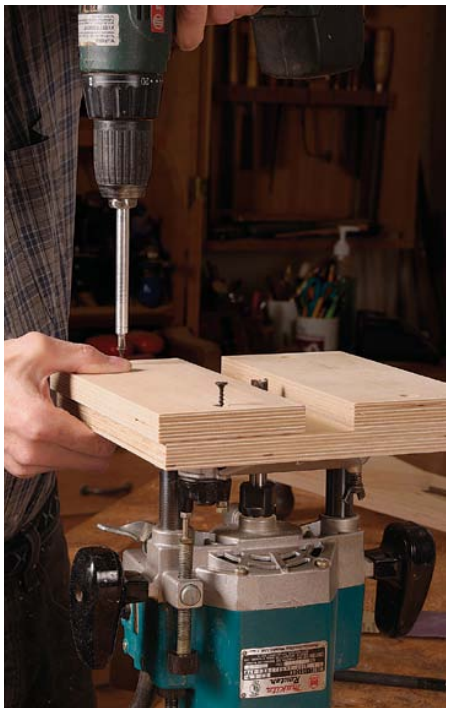

Smaller flush-trimming base. *This square base is great for flush-trimming tenons and pegs. It offers support for the router on both sides of the bit.*

through-tenons on the face of a board. Just add another layer to the bottom of the jig that extends all the way from the side where the handle is to about an inch shy of where the router bit will be. You'll have to press down securely on the handle, but this will give you access to rout off projections, where a standard router base would just bump up against them.

When you need to flush-trim in the middle of a workpiece, make a thicker sub-base that is square and just a little bigger than the base of your router. I made mine out of ¾-in. plywood, first attaching a square layer and then screwing blocks on either side of the bit to create a channel about ¾ in. wide (these dimensions will vary based on the specifics of the task). Set the router bit so it is just above the surface you're trimming down to.

This sub-base will support the router on both sides and prevent any tipping down onto the surface while you level wood

Sure-footed. *The base straddles a series of screw-hole plugs, for example, with the twin support rails preventing the bit from tipping into the work surface.*

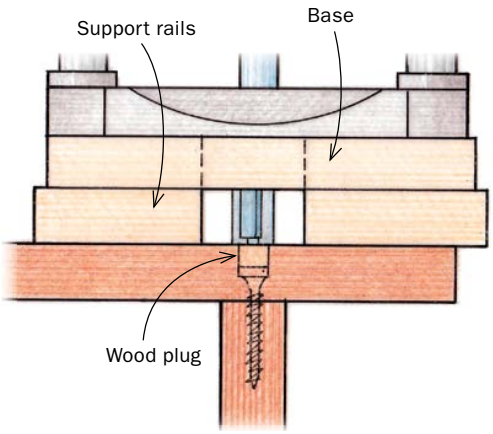

4 Make a mortising base

A SELF-CENTERING MORTISING BASE
In use, rotate the router until each pin touches the workpiece for a perfectly centered cut. For mortises near the end of a workpiece, you might need to leave some extra length at first to support the pins.

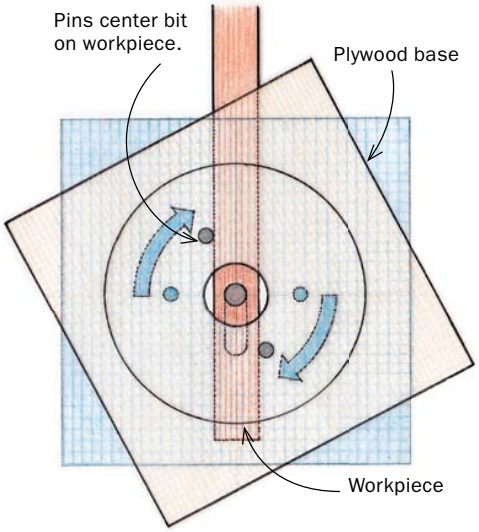

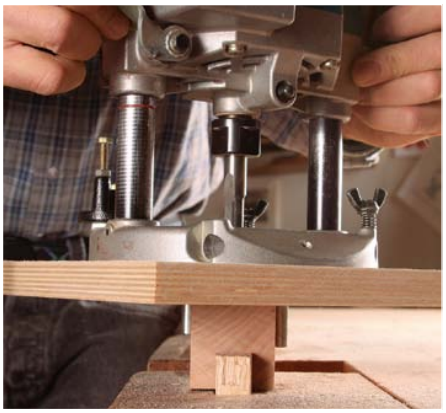

Rotate the router. *When the pins touch the sides of the workpiece, the router bit is centered.*

plugs, for example. This base is also handy for pegs or other projections on a narrower surface like a table leg.

Centering base makes mortising quick

Another base, used with a plunge router, makes it easy to center a mortise on a leg or post. The base has two downward projecting pins at equal distances from the bit on opposite sides. The concept is elegantly simple: When you rotate the router so that the pins are touching the sides of the workpiece, the router bit is centered.

SIMPLE METHOD FOR ACCURATE PINS

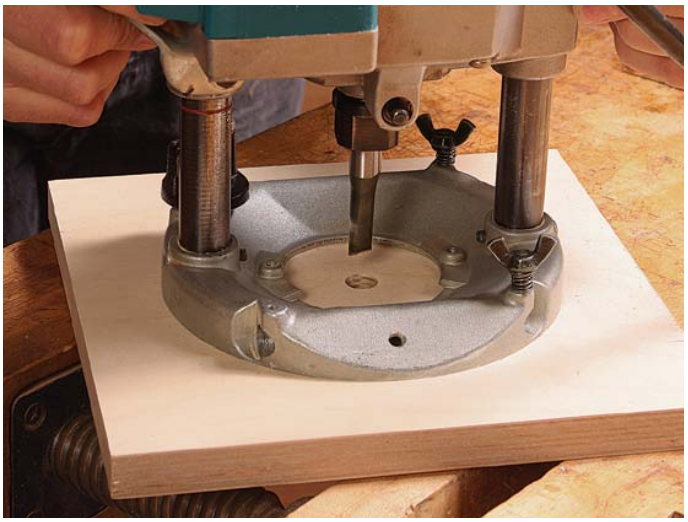

First, plunge through a square base. *Put a ½-in., plunge-cutting bit in the collet, and plunge down through the base.*

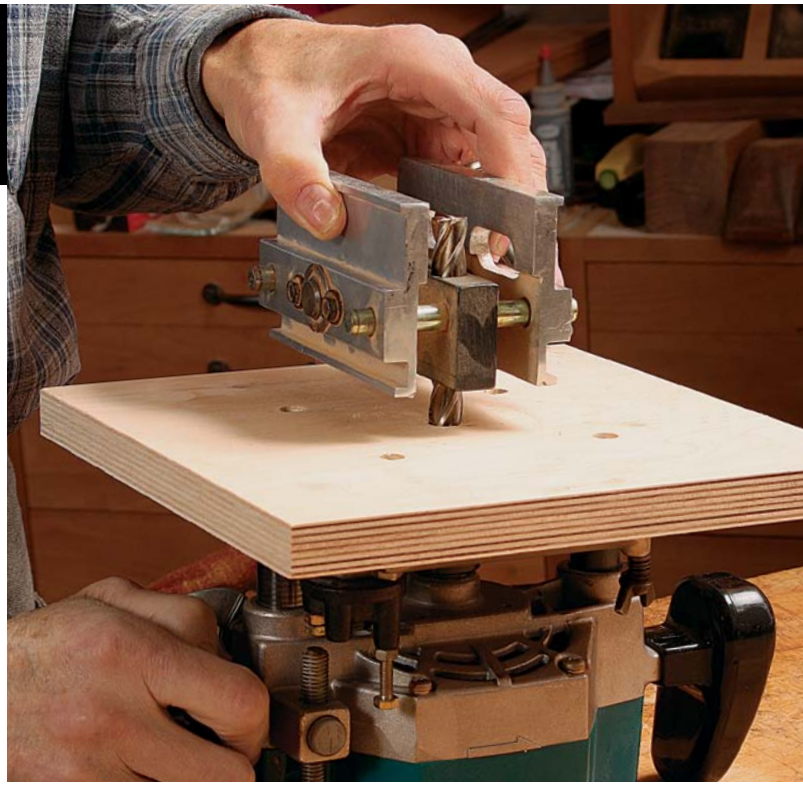

An unlikely layout tool. *With a ½-in. drill bit chucked in the router, Miller uses a doweling jig to locate and drill the pin holes directly opposite one another and equidistant from the bit.*

When building the base, it's crucial to locate the pins accurately. Do this after the base is attached to the router and a hole for the router bit has been plunged through. The distance between the pins should exceed the widest part you're likely to use it for. With the locations marked, remove the base and drill the holes on a drill press. Finally, insert smooth dowels—not the kind with ridges—or metal pins into the holes.

A better way to locate the holes is with a self-centering dowel jig, used in an unconventional way. With the base attached and the center hole plunged, chuck a ½-in. drill bit in your router (you won't be running the router with this, it's just a reference), then place the ½-in. bushing of the doweling jig over the bit. Align the ⅜-in. bushing hole so that it is either across or in line with the axis of the router handles, then position a straightedge against the jig and clamp the straightedge to the base. Drill through the ⅜-in. bushing into the base. Then swing the dowel jig around to the opposite side, use the straightedge to align it, and drill the other hole. You can then enlarge the hole for the router bit to whatever you need. □

Register the jig on a straight strip. *Clamp the strip in place and align the jig with it before marking and drilling the first hole.*

Rotate the jig. *After drilling the first hole, spin the jig 180° to locate the opposite hole.*

Pins center the router. *Add some glue, drive in two ⅜-in. dowels or metal pins, and the jig is done.*

Jeff Miller builds furniture and teaches woodworking in Chicago.

WORKSHOP

members only

Circle Guide for the Router

by Brian Bill

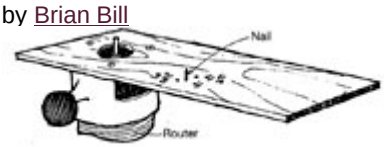

This fixture for routing circles has several advantages over commercial circle guides: it's cheaper, it cuts circles smaller than the router base and it allows repeat set-ups to precise radii without trial and error.

The guide is easy to make. Screw a piece of 1/4-in. plywood to the base of your router, carefully countersinking the screws. The plywood should be as wide as your router base and somewhat longer than the largest radius you intend to cut. Saw of drill a clearance hole for the router bit.

Let's say you need a 4-in. radius circle. Measure from the edge of the bit out 4 in. and drill a small hole at that point. Insert a brad in the hole, point up, to serve as a pivot. Drill a centerhole in a piece of scrap, place it on the guide, rout a short arc and measure the radius produced. You'll be lucky if it is right the first time. Regardless, label that hole with whatever radius it produces, say, 4-1/16 in. Then make another hole closer or farther, as the case may be, until you get the radius you want. Remember to mark each hole as you go. Since the markings are accurate for only that particular bit, you can divide the guide into sections and head each group of holes with the bit used 1/2-in. straight, for example.

Brian J. Bill, Old Bridge, N.J.

Fine Woodworking Magazine, December 1982 No. 37 , ,

October 25, 2005

RELATED ARTICLES

- **TIP:** Shape Chair Seats with a Router
- **TIP:** Shaping Curved Molding
- **TIP:** Router Guide for Convex Curves
- **TIP:** Cutting Large-Radius Arcs With a Router
- **TIP:** Making Discs on the Router Table

RELATED TOPICS:

TAUNTON'S

Fine WoodWorking®

Picture Framing

A project plan for professional-quality, custom frames at a fraction of the cost

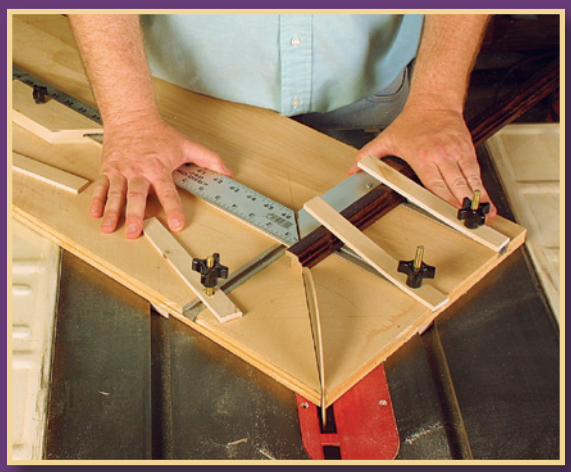

All About Picture

Make professional-quality, custom frames at a fraction of the cost

Framing is something woodworkers tend to shy away from: It may be fear of damaging an irreplaceable piece of art or of putting less-than-perfect miter joints on display. Frames tend to get scrutinized because they are the vehicles for displaying art; and because art is critiqued up close, the frame will be, too.

The good news is that professional-quality frames are not hard to make. The techniques are mostly familiar to woodworkers, there is only a modest outlay on tools and jigs, and frame stock can be purchased ready-made or built from scratch in your shop.

Artwork determines frame size and design

Art falls into two main categories when it comes to framing with and without glass: If the art is on paper, you should consider using a backing board, a mat, and glass as well as a frame; paintings on canvas look best with just a frame. The backing board keeps the art flat and secure, the glass protects the art from damage, and the mat keeps the art and glass from contacting each other and sticking together.

When it comes to mats, wider is better. Mats cut narrower than 2½ in. do not add much to the appearance of the framing. Aim for a mat that is 3 in. to 4 in. wide. Another option is to use two layers of mats, known as double matting, to give the framing a greater depth.

You need to visit a local picture-frame shop to select the mat, and to have it, the glass, and the backing board cut to size. Ask for acid-free materials in both

Three options for frames

BUILT-UP MOLDING FROM TRIM STOCK

Often a piece of ready-made molding will provide the inspiration for you to build a similar design from trim stock. Architectural trim moldings come in a large range of sizes and styles, but in most cases you will have to create a base and a rabbet. In this example, I started with a piece of poplar ¾ in. thick by 1¾ in. wide. I cut a rabbet ¾ in. wide by ½ in. deep on the tablesaw, and on the other side I routed a rabbet ¼ in. wide by ½ in. deep to hold the art. I then glued egg-and-dart trim to the wider rabbet and a strip of beading to the top surface.

Because the trim pieces may not match, paint is a better finishing option than stain. I sprayed a coat of gesso (a combination of plaster and glue) on this frame, followed by black and then bronze paint. After it dried, I rubbed the frame with 000 steel wool, then applied black wax to "age" it.

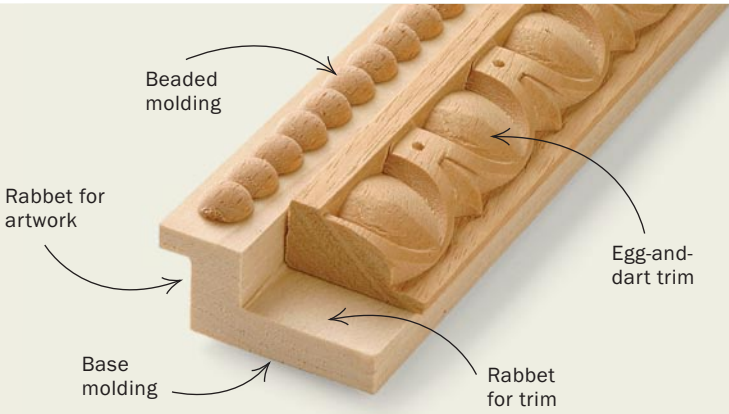

Rabbet the base and attach the trim. *After cutting the rabbet for the egg-and-dart molding on the tablesaw (above left), mill the rabbet for the artwork on the router table (above right). Glue the egg-and-dart trim to the rabbeted base, then add the beaded molding.*

Photos: Mark Schofield

Framing

BY ROBERT HAMON

the mat and the backing board. The additional charge is worth the protection it affords your artwork. Once you have all of these pieces cut to size, only then can you calculate the frame's dimensions.

Frame size refers to the dimensions of the artwork, not the outer size of the frame itself. When determining the size of a frame, measure to the inside of the rabbet. To allow for wiggle room, add an extra ⅛ in. in each direction. For example, a 16-in. by 20-in. piece of art gets a frame sized 16⅛ in. by 20⅛ in. When cutting the molding to rough length, add twice the width of the frame molding plus an inch or two as a safety margin.

Your picture frame must have a rabbet deep enough to secure the thickness of what you intend to frame. Mat board is 1⁄16 in. thick, backing typically is 3⁄16 in. thick, and glass is ⅛ in. thick. Most commercial frames have a rabbet depth of about ½ in. to allow for double mats and to leave enough space for fasteners to keep the contents in the frame. The standard width of the rabbet is ¼ in.

Miter corners on a special sled

Two factors are crucial for making mitered corners that fit perfectly. First, the 45° angles must be accurate. Second, the molding pieces that are opposite each other must be exactly the same length.

Cutting picture-frame miters on a tablesaw using a standard miter gauge is a real challenge. Problems include small amounts of play in the miter gauge and lack of support for the molding

MOLDING FROM SCRATCH

Although a frame does not require the strength of a hardwood, if you do use one, keep the design simple to show the figure of the grain to its best advantage. To make a frame with curves, use a softwood instead. White pine, fir, and spruce are easy to work, but if you plan to stain the frame, select the wood carefully to avoid streaks that may distract from the artwork.

The molding can be cut on a shaper, a router table, or with a molding head on the tablesaw.

READY-MADE MOLDING

You can get the same finished moldings—ranging from classical to contemporary—that are available to framing shops (see Sources of Supply on p. 72). Or you can purchase unfinished moldings if you want to stain or paint the frame to match the artwork. Avoid moldings that have rounded edges on the base or a deep curve in the back because it will be harder to clamp the frame when it is being glued together.

Block print, this page: Laura Wilder

Cut perfect miters on the tablesaw

Unlike most tablesaw sleds, this one has two fences of different lengths. A short fence is used to make the first cut on the right-hand side of the molding; a long fence is used to cut the left-hand miter. The longer fence incorporates a ruler and a stop block that allow moldings to be cut to precise and repeatable lengths. Hold-downs support stock over its entire length.

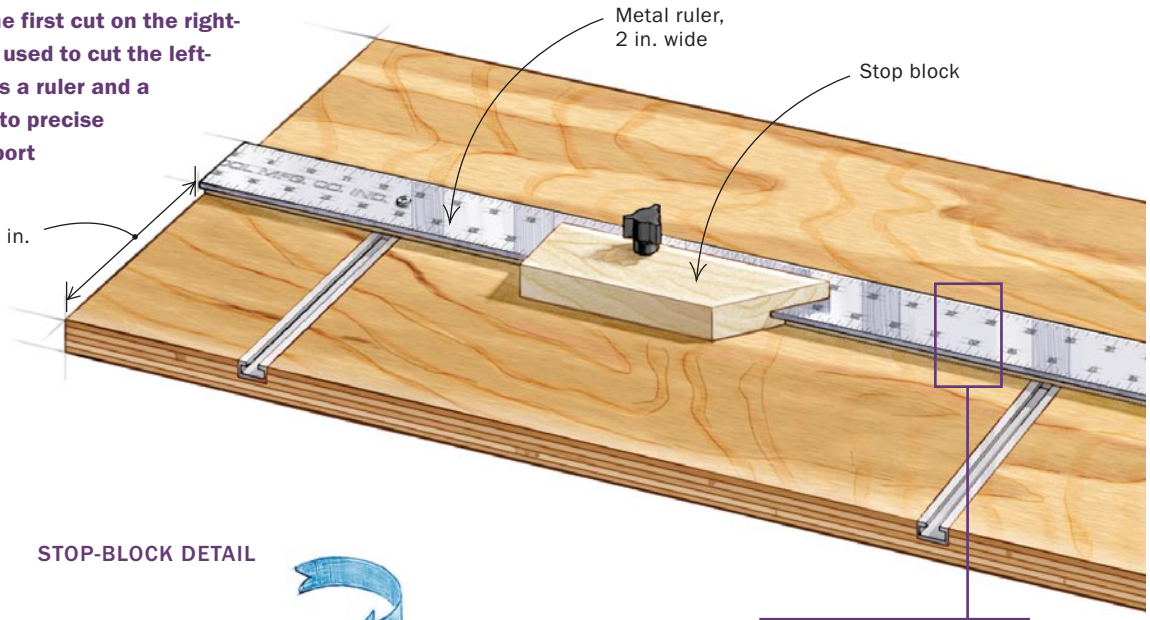

MATCH THE FRAME TO THE ARTWORK

Art on paper usually is surrounded by one or more mats and protected with glass before being framed (top). Oil paintings or reproductions may look best with just a frame and no mat or glass (bottom).

STOP-BLOCK DETAIL

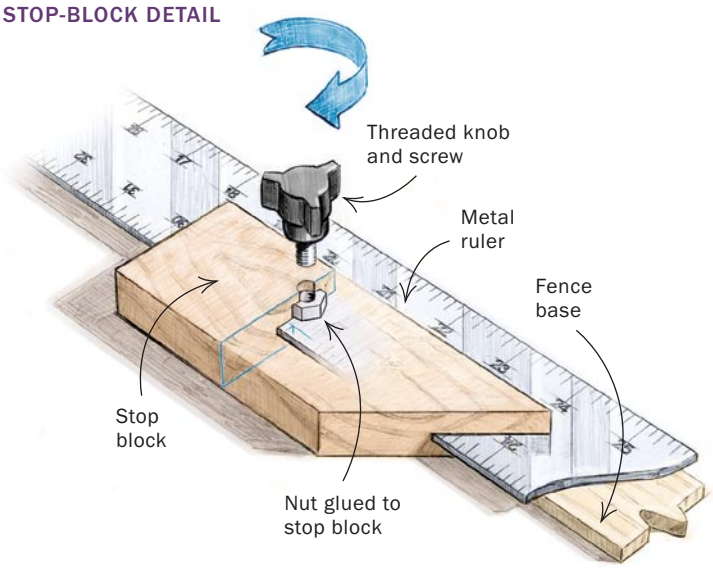

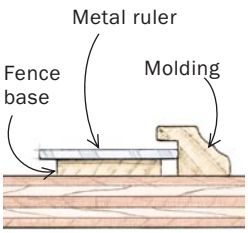

ACCURATE FRAME DIMENSIONS

The size of a frame is measured from the inside of the rabbet, so the jig and the stop block are designed to take this into account.

near the blade. The traditional solution has been to build a miter sled or a sliding miter jig that eliminates any movement and supports the full length of the workpiece up to the blade. Clamps or hold-downs add to the jig's accuracy. You may have a jig already, but to cut picture-frame molding, you need a jig with two further attributes: It must provide an accurate way to measure and cut the lengths of molding so that the opposing sides are exactly the same, and it must be designed to cut the outside edge of the molding first to eliminate splintering on the most visible edge of the frame.

My jig (see the drawings above) is designed to miter picture frames. Rather than the typical square board, it is a rectangle, aligned to the miter-gauge slots at a 45° angle. Instead of two fences of equal length, one is short for making the first cut on each section of molding, while the fence for the second cut is 36 in. long—the practical limit for cutting frames on a tablesaw. Each fence consists of a base with a ruler attached to it. The ruler on the long fence allows you to measure each piece accurately before it is cut. An adjustable stop helps make accurate duplicate pieces.

When cutting frame molding, always cut the longer sides first. If you should err, you still will be able to cut the longer piece into a shorter side. With your rough-cut section of molding secured to the short fence, miter the right-hand end. Move the molding to the long fence, using the ruler to establish the desired length. Clamp the molding and set the adjustable stop at the end of the molding. Cut the left-hand miter. The parallel section of molding is cut in the same way,

Drawings: John Hartman; painting, this page: William Godfrey

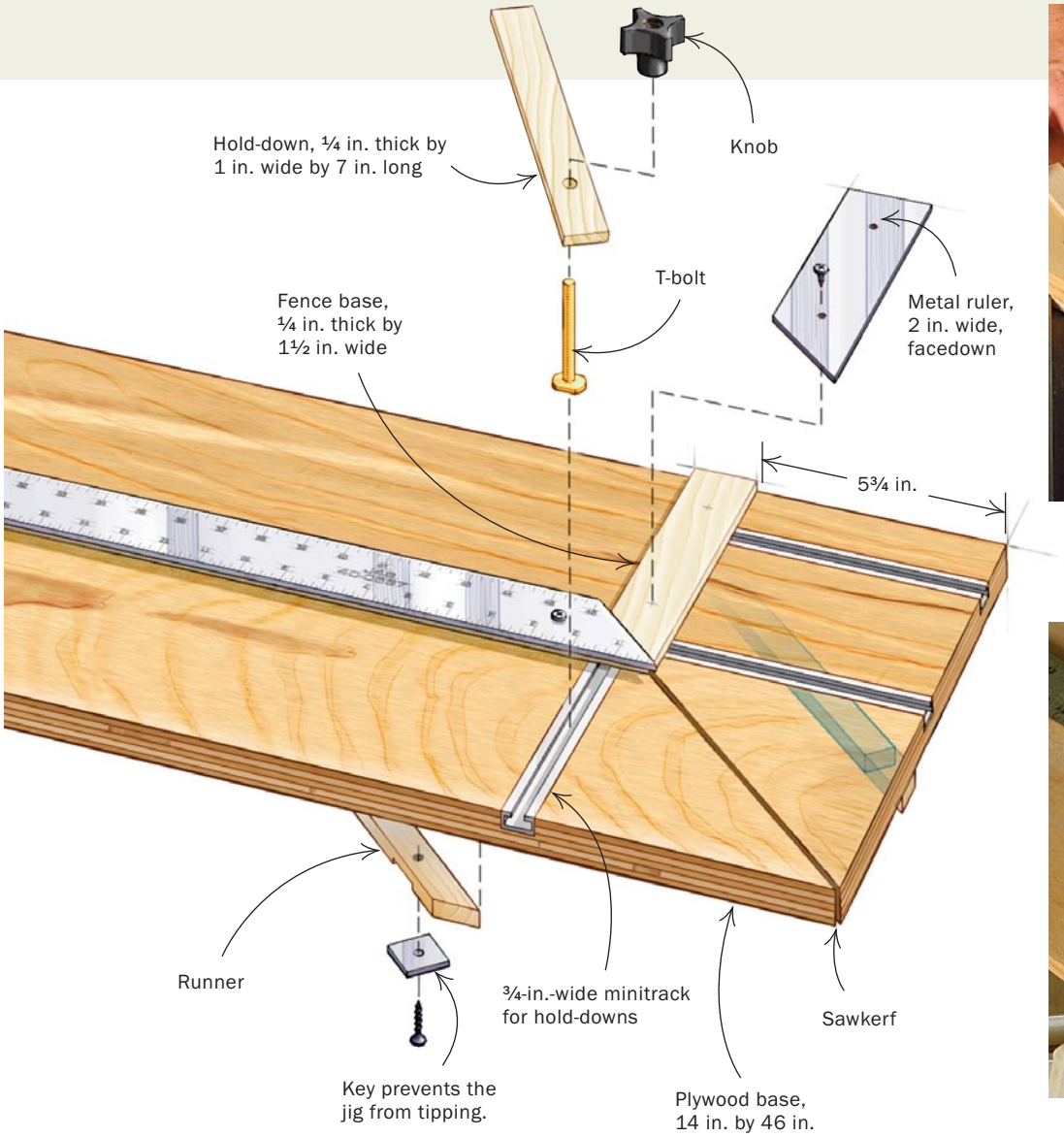

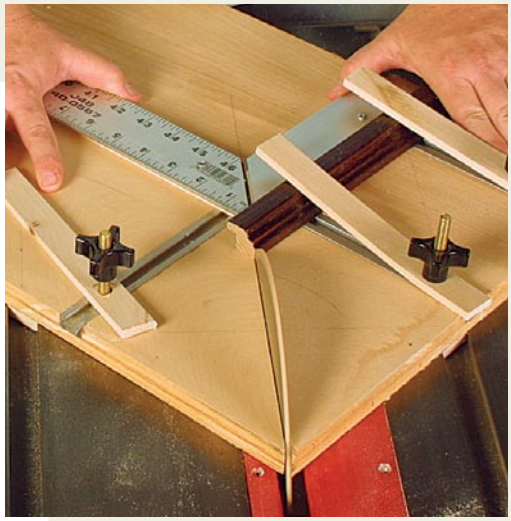

The first miter cut. *Clamp the piece of molding, rough-cut to length, to the short fence of the jig to cut the right-hand miter.*

The second cut. *Clamp the molding to the long fence and set the stop block at the correct distance from the blade (above). Then cut the left-hand miter (below).*

but now you have a stop, making the two sections identical in length.

Glue and strengthen the frame

With all four sides cut, you're now ready to assemble the frame. Most of the strength in the miter joint comes from the glue but only if the pieces are clamped together firmly and accurately. My favorite clamping method is a miter vise, but other methods include a strap clamp, especially with the use of corner blocks, and a four-corner clamp that uses threaded rods.

Nails can be added to reinforce the joint. Most framers drill a hole using a slightly smaller nail chucked in an electric drill. Nails can be added while the frame is secured in a miter clamp, or with the frame braced to absorb the blows of the hammer. To lessen the chance

Two options for gluing miters

The best clamp. *An old-fashioned heavy-duty miter clamp works best to glue frames together (right). A pair of clamps allows you to glue a frame in two steps. For smaller frames, threaded rods and corner blocks are the clamping method of choice (below).*

OR

Reinforce the miter joint. *Use a nail to drill a hole horizontally in each corner of the frame. Then hammer in a nail slightly larger than the hole. A miter clamp lets you nail the joint while the glue dries.*

of splitting the wood, make sure the nail is driven with the dominant edge perpendicular to the grain.

Fit the artwork into the frame

Your framing project is not done until it is hanging on the wall. A painting on canvas will require fastening only into the rabbet from the back of the frame. Picture framers call this "fitting." Fitting items with mats and glass is slightly different: Lay the glass, mat, picture, and backing board faceup while you clean the glass. Spray a nonammonia cleaner onto a section of folded paper towel and wipe the glass from the center toward your other hand that is holding the edge of the package to prevent movement. Turn over the glass by the edges and repeat until it is free of specks. Then place the frame over the package, slide it to the edge of the table, grip the whole thing, and flip it over.

Fastening everything into the frame is easiest with a point driver, especially if it is a hardwood frame. The hand tool looks like a staple gun, but it shoots a ⅝-in.-long point out the front into the inside of the rabbet. Alternative methods include using a brad setter, glazing points, or S-clips (see the left photos on the facing page).

Seal the back with gummed-paper box tape to prevent insects and dust from getting into the frame enclosure. Moisten the tape, press it into place, and trim any excess. Do not use self-adhesive tape because the oils soak into the frame and backing board, and the tape eventually comes off.

To wire the back of the frame, use two screw eyelets and twisted picture wire. Hardware stores sell these in packages rated for different picture weights. About a quarter to a third of the way from the top of the frame, puncture the back with an awl. Start the eyelet in the hole and then, using the awl inserted into the eye, turn the eyelet into the frame until it is secure. In softer woods, screw the eyelet all the way down. Loop the wire through the eye twice and wrap the small excess around the wire. The other end gets the same treatment, after the wire is pulled tight to eliminate slack. You have the correct tension if only two of your fingers can fit between the wire and the back of the frame. Now you are ready to hang your work for all to enjoy. □

Robert Hamon is a professional picture framer in Mission, Kan.

SOURCES OF SUPPLY

Dick Blick
800-828-4548
www.dickblick.com

Lee Valley Tools Ltd.
800-871-8158; www.leevalley.com

Van Dyke's Restorers
800-558-1234; www.vandykes.com

Woodworker's Supply
800-645-9292; www.woodworker.com

Secure the artwork in the frame

FOUR WAYS TO FASTEN EVERYTHING INSIDE

Points. *The easiest way to fasten the art is to use a point driver, which inserts arrow-headed points into the frame.*

OR

Brads. *Using a brad setter rather than a hammer lessens the chances of damaging the frame.*

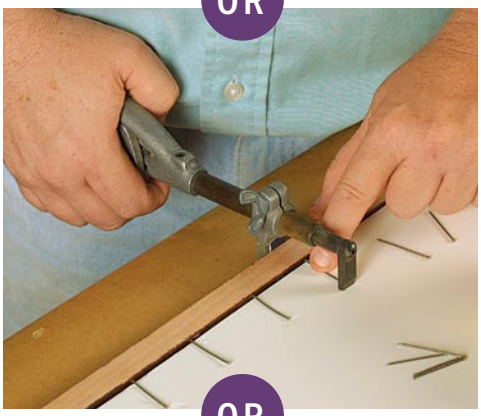

OR

Glazing points. *Drive glazing points into the frame with a broad-tipped screwdriver. A block braces the pressure on the frame.*

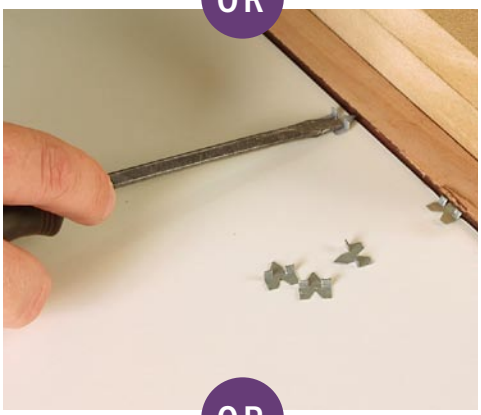

OR

S-clips. *These clips are available in different sizes to match the distance the artwork is below the back of the frame.*

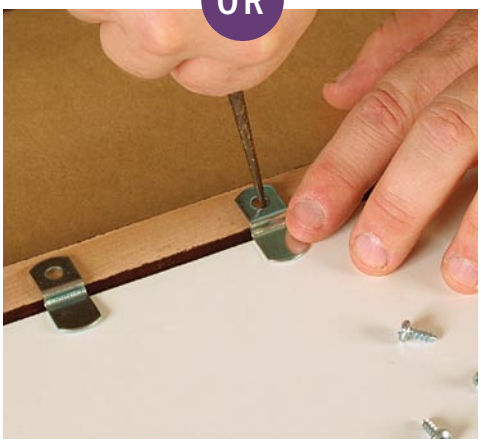

First, clean the glass. *Clean both sides of the glass with nonammonia-based glass cleaner. Then lower the frame onto the art package. Slide the art-and-frame combination to the edge of the table and flip it over to add the fasteners (left).*

Then seal in the artwork. *Attach gummed-paper box tape to the back of the frame to prevent dust or insects from getting into the framing.*

Now hang it by a wire. *The picture is hung using eyelets and twisted picture wire. Tension the wire until you can just fit two fingers under it.*